Service/ Parts Manual

PTAC Direct Sales, Inc. 185
S. Kimball Ave. Suite 130
Southlake, TX 76092
877.454.7822 (T)

FRIEDRICH

Thru - the Wall Air Conditioners

Wallmaster Models

Cool Only	**115-Volt:**	WCT08A10A, WCT10A10A, WCT12A10A, WCT12A10B
	230-Volt:	WCT10A30A, WCT12A30A, WCT16A30A
Electric Heat	**230-Volt:**	WET10A33A, WET12A33A, WET16A33A
Heat Pump	**230-Volt:**	WHT12A33A

93001405_02

Table of Contents

INTRODUCTION

Important Safety Information

The information in this manual is intended for use by a qualified technician who is familiar with the safety procedures required for installation and repair, and who is equipped with the proper tools and test instruments required to service this product.

Installation or repairs made by unqualified persons can result in subjecting the unqualified person making such repairs as well as the persons being served by the equipment to hazards resulting in injury or electrical shock which can be serious or even fatal.

Safety warnings have been placed throughout this manual to alert you to potential hazards that may be encountered. If you install or perform service on equipment, it is your responsibility to read and obey these warnings to guard against any bodily injury or property damage which may result to you or others.

Your safety and the safety of others is very important.

We have provided many important safety messages in this manual and on your appliance. Always read and obey all safety messages.

This is a safety Alert symbol.
This symbol alerts you to potential hazards that can kill or hurt you and others.

All safety messages will follow the safety alert symbol with the word "WARNING" or "CAUTION". These words mean:

⚠ WARNING — Indicates a hazard which, if not avoided, can result in severe personal injury or death and damage to product or other property.

⚠ CAUTION — Indicates a hazard which, if not avoided, can result in personal injury and damage to product or other property.

NOTICE — Indicates property damage can occur if instructions are not followed.

All safety messages will tell you what the potential hazard is, tell you how to reduce the chance of injury, and tell you what will happen if the instructions are not followed.

⚠ WARNING

Refrigeration system under high pressure

Do not puncture, heat, expose to flame or incinerate.

Only certified refrigeration technicians should service this equipment.

R410A systems operate at higher pressures than R22 equipment. Appropriate safe service and handling practices must be used.

Only use gauge sets designed for use with R410A. Do not use standard R22 gauge sets.

INTRODUCTION

Personal Injury Or Death Hazards

	⚠ WARNING	⚠ AVERTISSEMENT	⚠ ADVERTENCIA
SAFETY FIRST	Do not remove, disable or bypass this unit's safety devices. Doing so may cause fire, Doing so may cause fire, injuries, or death.	Ne pas supprime, désactiver ou contourner cette l´unité des dispositifs de sécurité, faire vous risqueriez de provoquer le feu, les blessures ou la mort.	No eliminar, desactivar o pasar por alto los dispositivos de seguridad de la unidad. Si lo hace podría producirse fuego, lesiones o muerte.

ELECTRICAL HAZARDS:

- Unplug and/or disconnect all electrical power to the unit before performing inspections, maintenance, or service.
- Make sure to follow proper lockout/tag out procedures.
- Always work in the company of a qualified assistant if possible.
- Capacitors, even when disconnected from the electrical power source, retain an electrical charge potential capable of causing electric shock or electrocution.
- Handle, discharge, and test capacitors according to safe, established, standards, and approved procedures.
- Extreme care, proper judgment, and safety procedures must be exercised if it becomes necessary to test or troubleshoot equipment with the power on to the unit.
- Do not spray water on the air conditioning unit while the power is on.
- Electrical component malfunction caused by water could result in electric shock or other electrically unsafe conditions when the power is restored and the unit is turned on, even after the exterior is dry.
- Use air conditioner on a single dedicated circuit within the specified amperage rating.
- Use on a properly grounded outlet only.
- Do not cut or modify the power supply cord or remove the ground prong of the plug.
- Never operate the unit on an extension cord.
- Follow all safety precautions and use proper and adequate protective safety aids such as: gloves, goggles, clothing, properly insulated tools, and testing equipment etc.
- Failure to follow proper safety procedures and/or these warnings can result in serious injury or death.

INTRODUCTION

PERSONAL INJURY OR DEATH HAZARDS

- **REFRIGERATION SYSTEM REPAIR HAZARDS:**
- Use approved standard refrigerant recovering procedures and equipment to relieve high pressure before opening system for repair.
- Do not allow liquid refrigerant to contact skin. Direct contact with liquid refrigerant can result in minor to moderate injury.
- Be extremely careful when using an oxy-acetylene torch. Direct contact with the torch's flame or hot surfaces can cause serious burns.
- Make certain to protect personal and surrounding property with fire proof materials and have a fire extinguisher at hand while using a torch.
- Provide adequate ventilation to vent off toxic fumes, and work with a qualified assistant whenever possible.
- Always use a pressure regulator when using dry nitrogen to test the sealed refrigeration system for leaks, flushing etc.
- **MECHANICAL HAZARDS:**
- Extreme care, proper judgment and all safety procedures must be followed when testing, troubleshooting, handling, or working around unit with moving and/or rotating parts.
- Be careful when, handling and working around exposed edges and corners of the sleeve, chassis, and other unit components especially the sharp fins of the indoor and outdoor coils.
- Use proper and adequate protective aids such as: gloves, clothing, safety glasses etc.
- Failure to follow proper safety procedures and/or these warnings can result in serious injury or death.
- **PROPERTY DAMAGE HAZARDS**
- **FIRE DAMAGE HAZARDS:**
- Read the Installation/Operation Manual for the air conditioning unit prior to operating.
- Use air conditioner on a single dedicated circuit within the specified amperage rating.
- Connect to a properly grounded outlet only.
- Do not remove ground prong of plug.
- Do not cut or modify the power supply cord.
- Do not use extension cords with the unit.
- Be extremely careful when using acetylene torch and protect surrounding property.
- Failure to follow these instructions can result in fire and minor to serious property damage.
- **WATER DAMAGE HAZARDS:**
- Improper installation, maintenance or servicing of the air conditioner unit can result in water damage to personal items or property.
- Insure that the unit has a sufficient pitch to the outside to allow water to drain from the unit.
- Do not drill holes in the bottom of the drain pan or the underside of the unit.
- Failure to follow these instructions can result in damage to the unit and/or minor to serious property damage.

INTRODUCTION

New Wallmaster Control Options

The new Wallmaster gives you a variety of options for control, programming, and scheduling including wireless capabilities.

Wireless Programming and Control:

Friedrich Connect allows you to conveniently control, program, and monitor your air conditioning unit remotely from a smartphone or computer.

Pre-Programmed Timer Options:

Your unit's digital control comes equipped with a 24-hour timer.

24-Hour Timer

The 24-hour timer allows you to set 2 temperature changes at pre-set times on the unit control panel.

Customizable Programming Options:

Customizable timers, with up to four temperature adjustments per day, can be set using Friedrich Connect for one or multiple units.

See www.friedrich.com for complete details on Friedrich Connect.

Figure 101 (New Kuhl Options)

INTRODUCTION

This service manual is designed to be used in conjunction with the installation and operation manuals provided with each air conditioning system.
This service manual was written to assist the professional service technician to quickly and accurately diagnose and repair malfunctions.
Installation procedures are not given in this manual. They are given in the Installation/Operation manual which can be aquired on the Friedrich website.

Model and Serial Number Location

Model and Serial Number Information

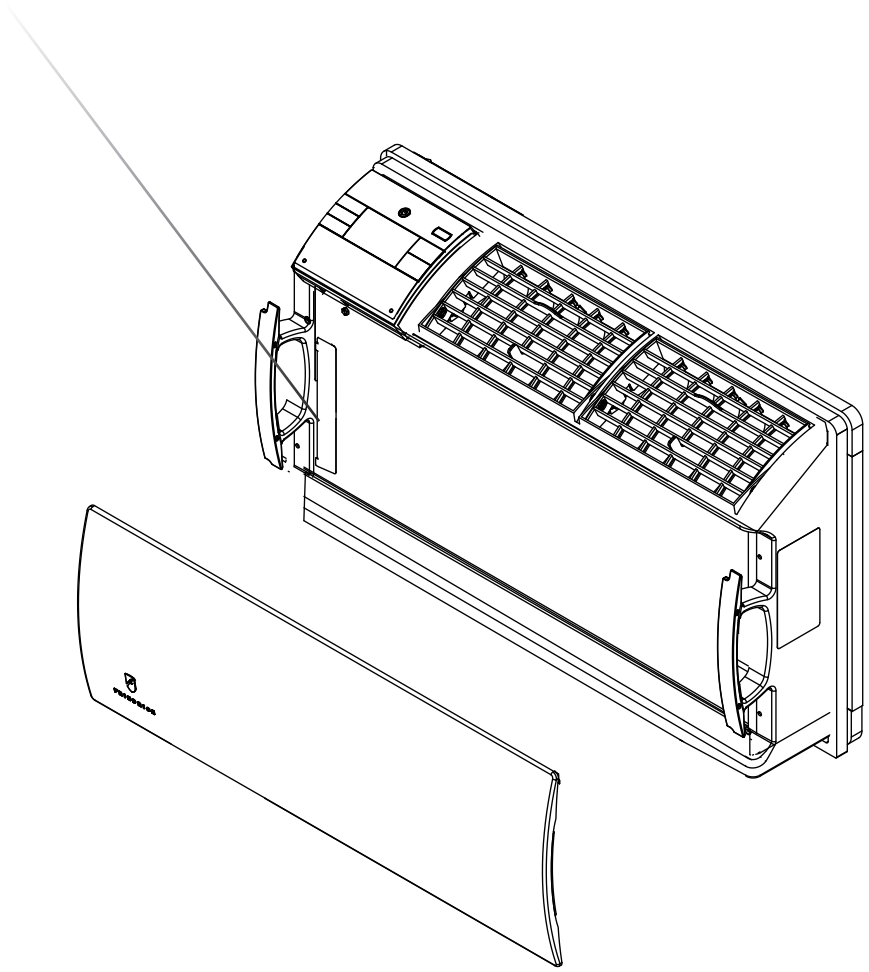

Figure 102 (Model and Serial Number Location)

INTRODUCTION

Model Number Reference Guide

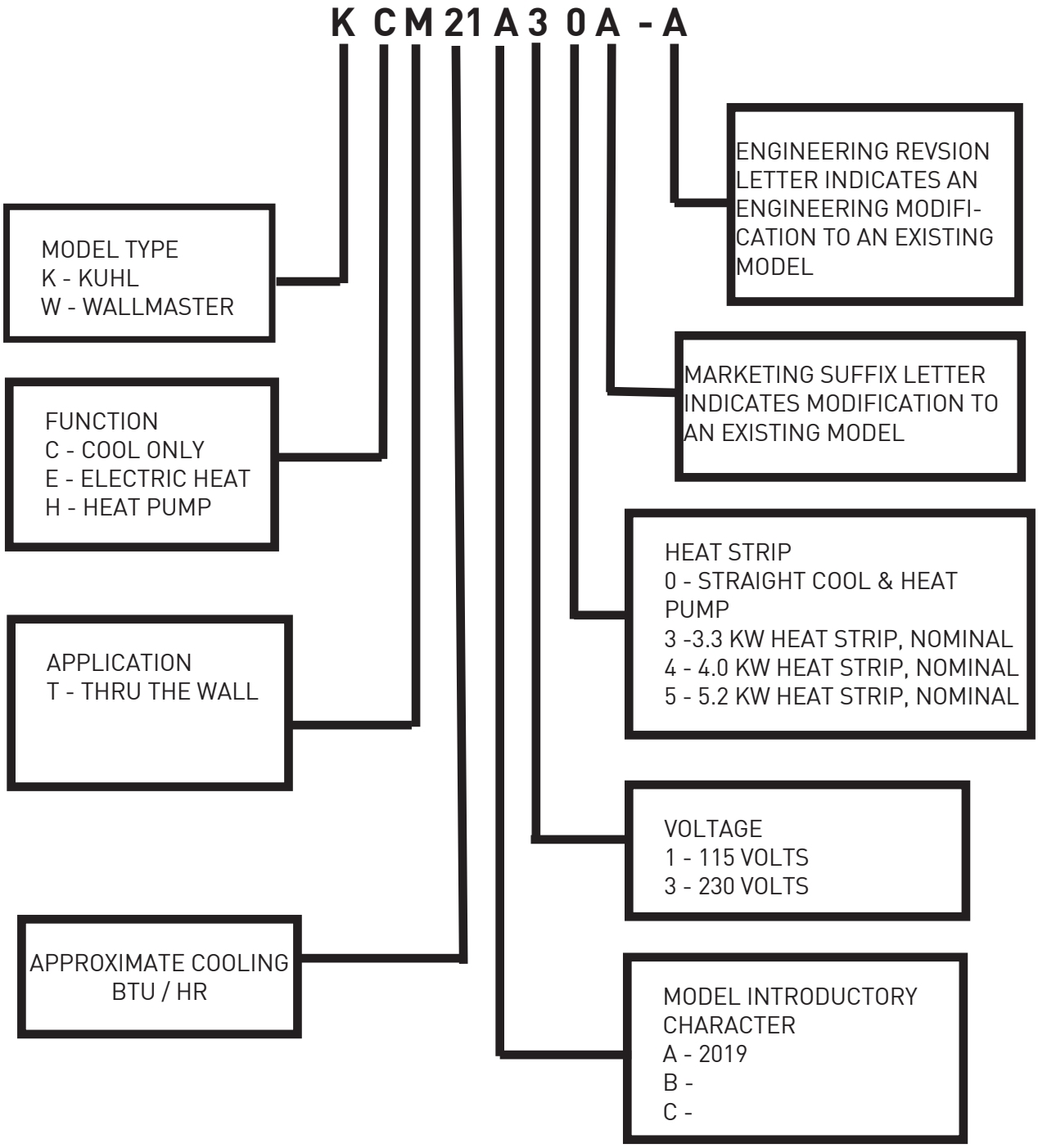

IMPORTANT: It will be necessary for you to accurately identify the unit you are servicing, so you can be certain of a proper diagnosis and repair.

Figure 103 (Model Number Reference Guide)

INTRODUCTION

Serial Number Reference Guide

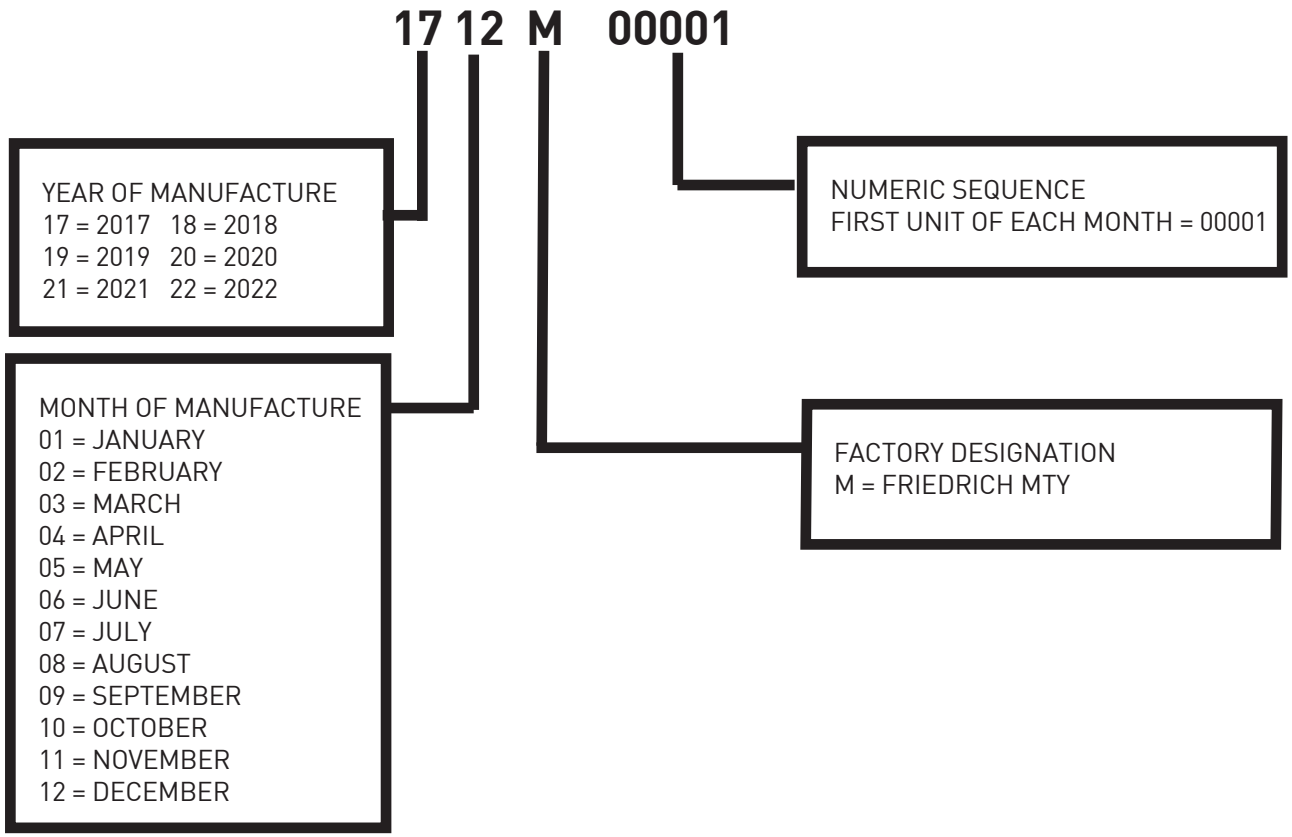

Figure 104 (Serial Number Reference Guide)

SPECIFICATIONS

Refrigeration Systems Performance Data

Model	Condensor Temp Deg F.	Discharge Temp Deg. F	Suction Temp Deg F	Electrical Ratings AMPS COOL	AMPS HEAT	LOCKED ROTOR AMPS	R-410A REF. CHARGE IN OZ	Voltage	Breaker 60 HERTZ AMPS
Cool Only									
WCT08A10A	121	161	64	7		30.5	23.5	115	15
WCT10A10A	125	158	50	9.3		49	26.6	115	15
WCT10A30A	122	162	53	4.4		21	24	230	15
WCT12A10A	121	159	55	11.1		52	32.5	115	15
WCT12A10B	121	159	55	10.5		52	27.8	115	15
WCT12A30A	121	162	58	5.4		29	29.3	230	15
WCT16A30A	125	167	51	7.5		52	40	230	15
Cool+ (Heat Pump)									
WET10A33A	122	162	53	4.4	16	21.5	24	230	20
WET12A33A	121	162	58	5.4	16	29	29.3	230	20
WET16A33A	125	167	51	7.5	16	33	40	230	20
Cool+ (Electric Heat)									

*Rating Conditions: 80 degrees F, room air temp. & 50% relative humidity, with 95 degree F, outside air temp & 40% relative humidity, all systems use R-410A. Test done at highest unit fan speed.

Figure 201 (Refrigeration Systems Performance Data)

SPECIFICATIONS

Model	UPC	Cooling Btu	Heating Btu	Volts	Cooling Amps	Cooling Watts	Heating Amps	Heating Watts	EER	CEER	COP	Moisture Removal-Pints/HR	CFM
Cooling Only													
WCT08A10A	724587436655	8000	—	115	7.0	748	—	—	10.7	10.6	—	1.8	250
WCT10A10A	724587436662	10000	—	115	9.3	935	—	—	10.7	10.6	—	2.4	250
WCT12A10A	724587436952	12000	—	115	11.1	1250	—	—	9.6	9.5	—	3.8	295
WCT12A10B	724587436952	11600	—	115	10.5	11700	—	—	9.6	9.5	—	3.8	295
WCT10A30A	724587436945	10000	—	230	4.4	935	—	—	10.7	10.6	—	2.7	275
WCT12A30A	724587436969	12000	—	230	5.4	1250	—	—	9.6	9.5	—	3.8	300
WCT16A30A	724587436976	15400	—	230	7.5	1638	—	—	9.4	9.3	—	4.8	290
Cooling with Heat Pump and Electric Heat													
WHT12A33A	724587436983	11100		230	5.5	1181	1087	5.0	9.4	9.3	2.3	3.1	275
Cooling with Electric Heat													
WET10A33A	724587436990	10000	11000	230	4.4	935	3550	16.0	10.7	10.6	—	2.7	260
WET12A33A	724587437003	12000	11000	230	5.4	1250	3550	16.0	9.6	9.5	—	3.8	290
WET16A33A	724587437010	15400	11000	230	7.5	1638	3550	16.0	9.4	9.3	—	4.8	290

Figure 202 (Specifications)

HEATING PERFORMANCE: Change-over from heat pump operation to resistance operation on models indicated is automatic at a preset outside ambient temperature of approximately 35°F.

Calculate the heat loss of the space to be heated. As long as the heat loss does not exceed the resistance heating capacity rating of the unit, the heating performance will be satisfactory.

Note: all models will produce condensate. If condensate disposal is desired, an optional drain kit is available.

DEFROST CONTROL: Initiated at 30°F (outdoor coil temperature) and terminated at 43°F (outdoor coil temperature). During defrost, the compressor stops and the electric heat starts, then operates with the fan to maintain indoor comfort. Below 43°F, the unit remains in electric heat mode.

DEFROST DRAIN: Drain automatically opens at approximately 50°F to prevent condensate from freezing inside drain pan.

Installation

Height	Width	Depth	Height of Front	Width of Front	Depth with Front	Minimum Extension Into Room with Front
15¾"	26½"	21"	17¼"	27½"	23¼"	7½"

Figure 203 (Chassis Dimensions)

Height	Width	Depth	Depth with Front	Minimum Extension Outside	Thru-the-wall Finished Hole		
					Height	Width	Max. Depth
16¾"	27"	16¾"	24¼"	9/16"	17¼"	27¼"	15 5/16"

Figure 204 (WSE Sleeve Dimensions)

Installation Clearances

Improper installation of the Air Condtioner can cause poor performance and premature wear of the unit.
Ensure that the Wallmaster unit is installed with proper clearances as described below.
Ensure no obstructions. or enclosures are within clearances limits to allow for proper airflow.

Clearances

Rear of Unit - Three (3) feet

SPECIFICATIONS

Electrical Data

⚠ WARNING

ELECTRIC SHOCK HAZARD

Turn off electric power before service or installation.

All electrical connections and wiring MUST be installed by a qualified electrician and conform to the National Electrical Code and all local codes which have jurisdiction.

Failure to do so can result in personal injury or death.

NOTICE

FIRE HAZARD

Not following the above WARNING could result in fire or electically unsafe conditions which could cause moderate or serious property damage.
Read, understand and follow the above warning.

Circuit Rating/Breaker/power cord/ wall Receptacle

Model	Circuit Rating Breaker or T-D Fuse	Plug Face (NEMA#)	Power Cord Length (ft.)	Required Wall Receptacle NEMA NO.	Wall Outlet Appearance
WCT08A10A, WCT10A10A , WCT12A10A.	125V - 15A	5 - 15P	6	5-15R	
WCT10A30A, WCT12A30A, WCT16A30A.	250V - 15A	6 - 15P	6	6-15R	
WHT12A33A, WET10A33A, WET12A33A. WET16A33A.	250V - 20A	6 - 20P	6	6-20R	

Figure 206 (Circuit Breaker / Plug / Receptacle / Cord Rating)

Wire Size - Use ONLY wiring size recommended for single outlet branch circuit.

Fuse/ Circuit Breaker - Use ONLY the correct HACR type and size fuse/circuit breaker. Read electrical ratings on unit's rating plate. Proper circuit protection is the responsibiity of the homeowner.

Grounding - Unit MUST be grounded from branch circuit through service cord to unit, or through separate ground wire provided on permanently connected units. Be sure that branch circuit or general purpose outlet is grounded.

Receptacle - The field supplied outlet must match plug on service cord and be within reach of service cord. Do NOT alter the service cord or plug. Do NOT use an extension cord. Refer to the table above for proper receptacle and fuse type.

SPECIFICATIONS

Electrical Data

⚠ WARNING

Electrical Shock Hazard

Make sure your electrical receptacle has the same configuration as your air conditioner's plug. If different, consult a Licensed Electrician.
Do not use plug adapters.
Do not use an extension cord.
Do not remove ground prong.Always plug into a grounded 3 prong outlet. Failure to follow these instructions can result in death, fire, or electrical shock.

NOTICE

Do not use the LCDI device as an ON/OFF switch.

Failure to adhere to this precaution may cause premature equipment malfunction.

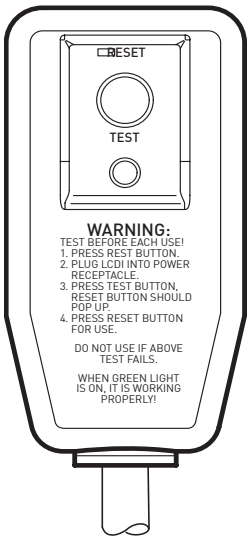

Figure 207 (LCDI Power Cord)

Make sure the wiring is adequate for your unit.

If you have fuses, they should be of the time delay type. Before you install or relocate this unit, be sure that the amperage rating of the circuit breaker or time delay fuse does not exceed the amp rating listed in Table 206.

DO NOT use an extension cord.

The cord provided will carry the proper amount of electrical power to the unit; an extension cord may not.

Make sure that the receptacle is compatible with the air conditioner cord plug provided.

Proper grounding must be maintained at all times. Two prong receptacles must be replaced with a grounded receptacle by a certified electrician.

The grounded receptacle should meet all national and local codes and ordinances. You must use the three prong plug furnished with the air conditioner. Under no circumstances should you remove the ground prong from the plug.

Test the power cord.

All Friedrich room air conditioners are shipped from the factory with a Leakage Current Detection Interrupter (LCDI) equipped power cord. The LCDI device on the end of the cord meets the UL and NEC requirements for cord connected air conditioners.

To test your power supply cord:

1. Plug power supply cord into a grounded 3 prong outlet.

2. Press RESET (see Figure 207).

3. Press TEST, listen for click; the RESET button trips and pops out.

4. Press and release RESET (Listen for click; RESET button latches and remains in). The power cord is ready for use.

Once plugged in, the unit will operate normally without the need to reset the LCDI device. If the LCDI device fails to trip when tested or if the power supply cord is damaged, it must be replaced with a new power supply cord from the manufacturer.

OPERATION

Airflow Adjustment

The airflow path may be adjusted to distribute air independently from the left or right side of the discharge opening. Each of the banks of louvers can be directed left, right, up, or down in order to achieve the most optimum airflow positioning.

To adjust airflow direction left or right, grab the lever in the center of the louver bank and move it in the direction that you would like the air to be directed. To adjust the airflow up or down, rotate the entire vent to the desired position Please note that it is normal that airflow may be stronger out of one side of the louvers than the other.

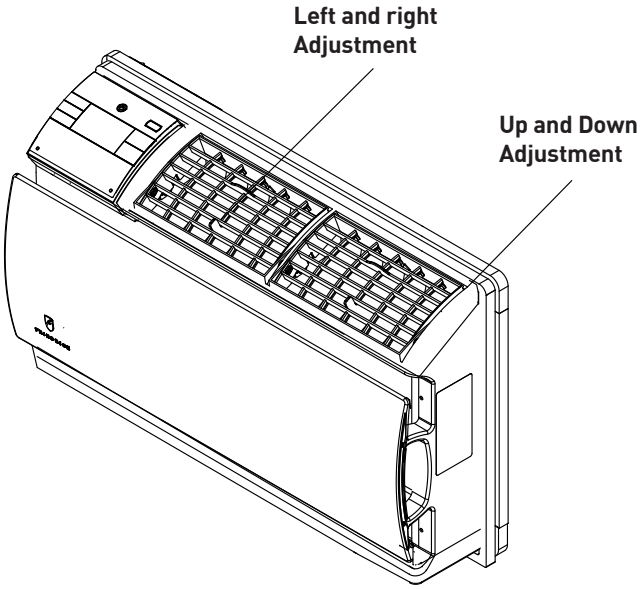

Figure 301 (AIRFLOW SELECTION AND ADJUSTMENT)

OPERATION

User Interface

All of the control panel function buttons and mode icons can be viewed in Figures 302.

Power On – Press the button to turn on the air conditioner. The power button illuminates to indicate that the power is on. The backlight on the power switch will automatically turn off after 20 seconds of inactivity. The remote control can also be used to turn power ON / OFF (see Remote Control).

Display – The display is a high efficiency LCD with a built-in backlight. After 20 seconds of inactivity, the display switches off. Touching any button automatically changes the display to full brightness.

CONTROL PANEL AND DISPLAY

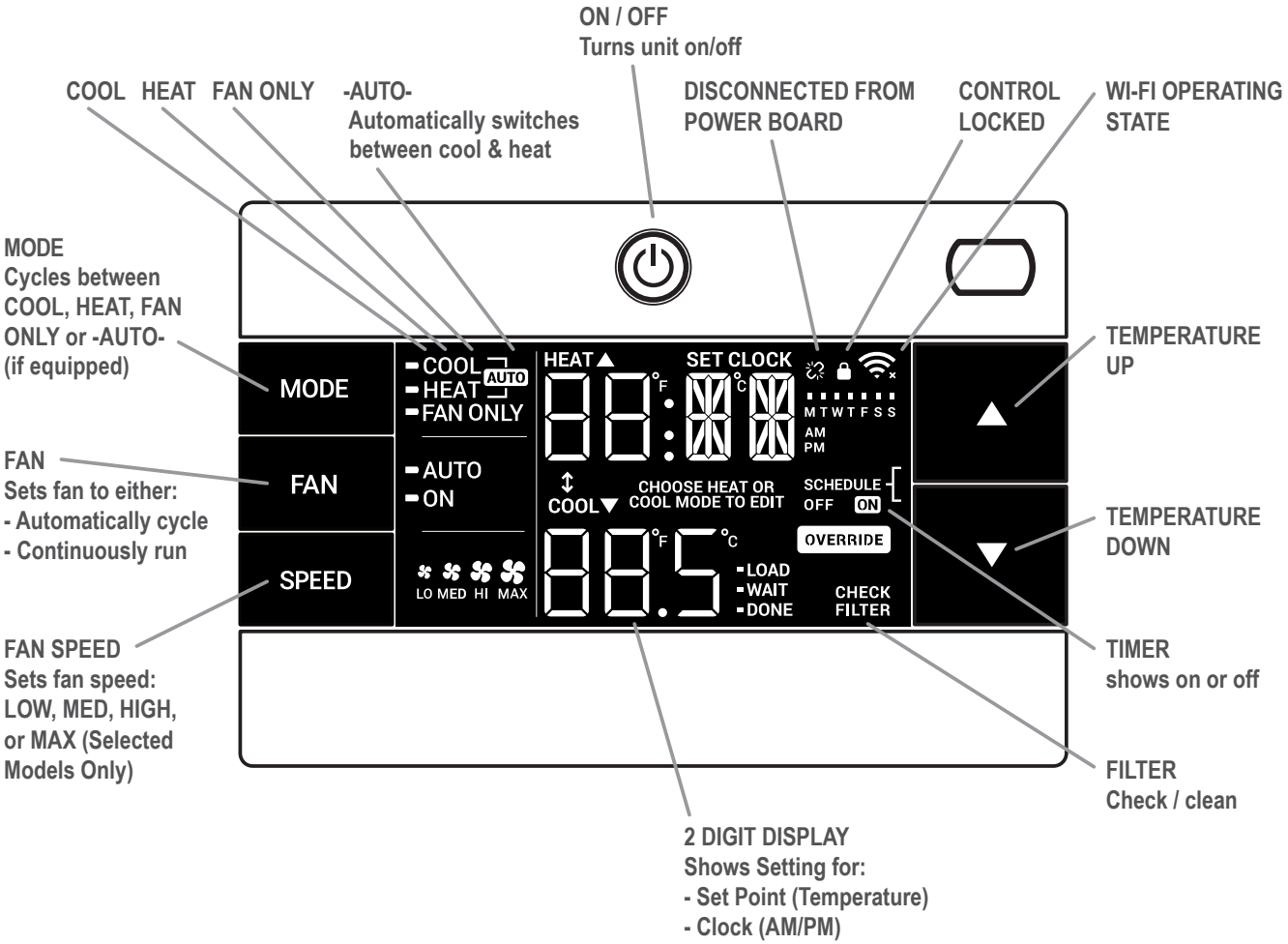

Figure 302

OPERATION

User Interface

Accessing Sub-Menus

The MENU button accesses the sub-menu. See Figure 10.
Press the Menu Button to enter the Menu. See Figure 303.
The arrow buttons navigate the 6 menu options. See Figure 304.

- LIM
- TM
- F-C
- LOCK
- CnCT
- diAG

The return button exits the menu. See Figure 304.

Figure 303

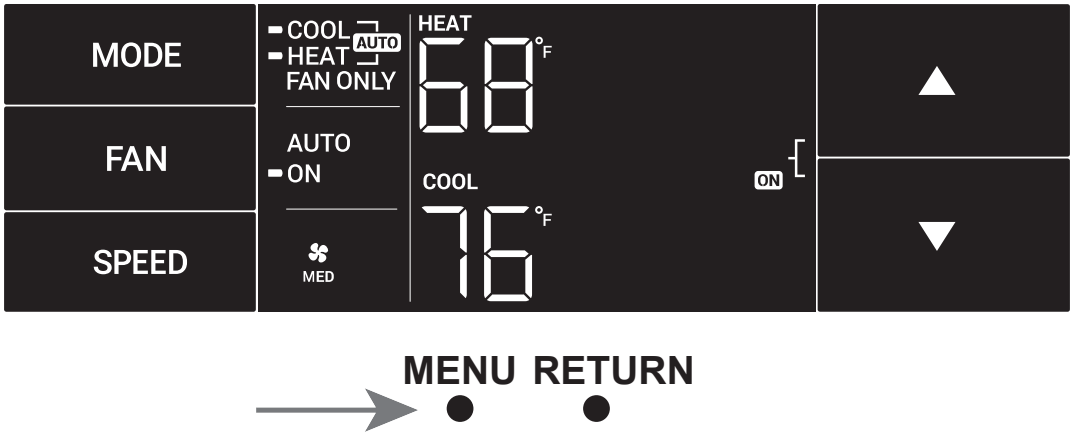

Figure 304

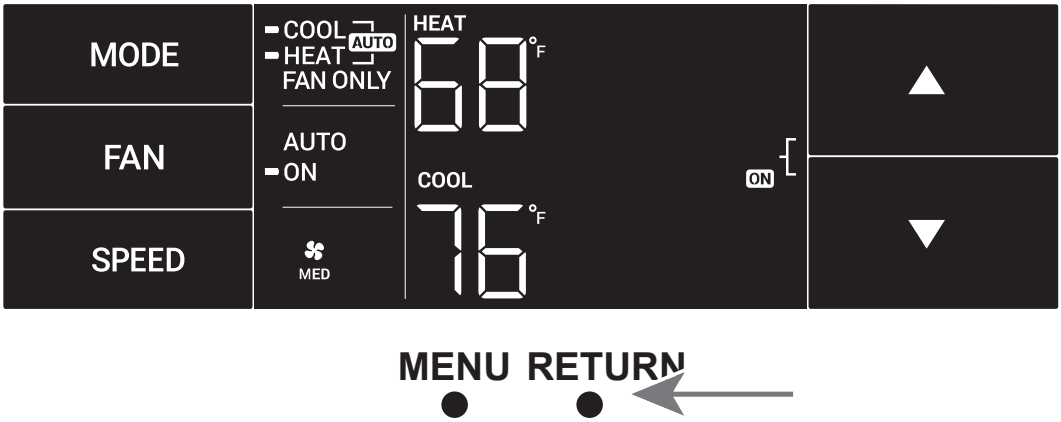

Figure 305

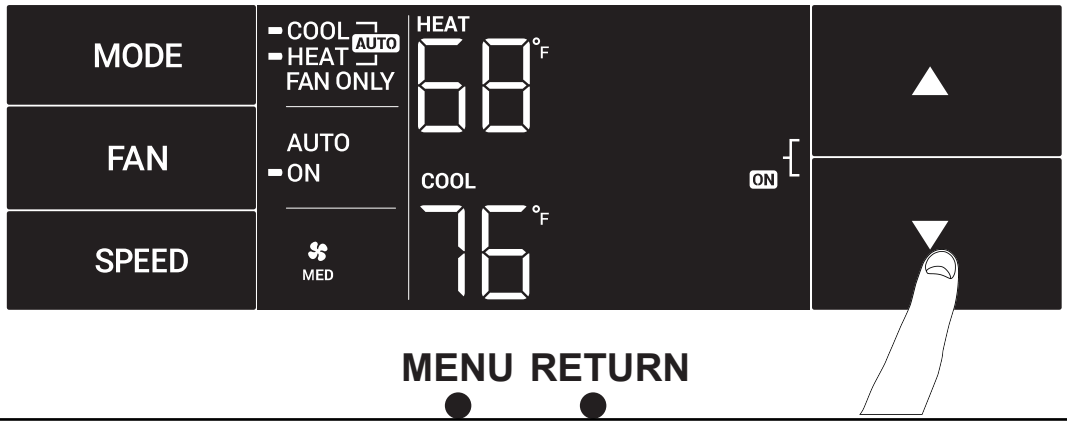

OPERATION

User Interface

Navigating Inside the Sub-Menus

The MENU button moves you forward through the sub-menu. See Figure 306.

The return button moves you backward once inside the LIM, TM, F-C, LOCK, CnCt, and diag menus. See Figure 306.

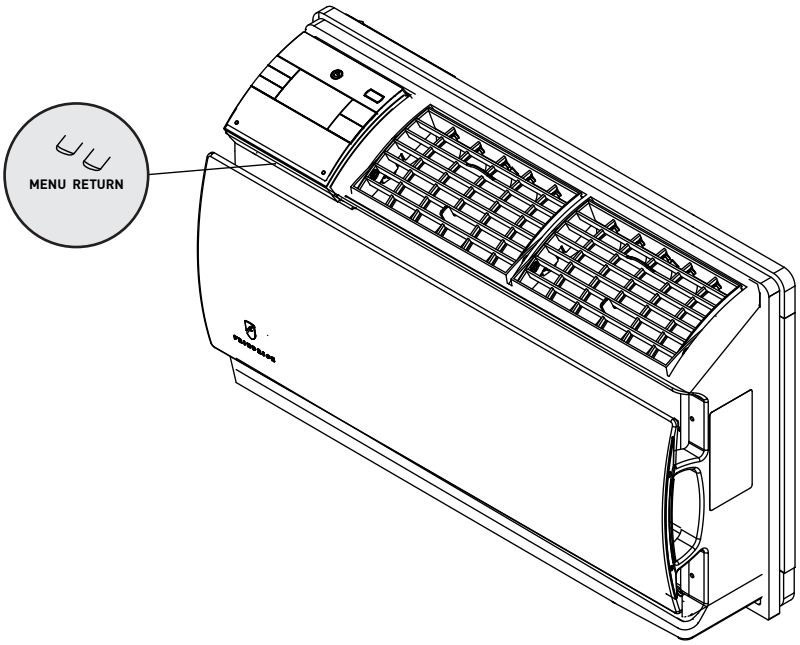

Figure 306 (Menu and Return Buttons)

OPERATION

User Interface

The LIM Menu (LIMIT)

This is the limit menu. See Figure 307.
Upon entering the menu, the first option will be to set the lower setpoint limit using the arrow buttons. See Figure 308.
Then you can set the higher setpoint limit using the arrow buttons. See Figure 309.
Pressing the menu button completes the limit setting. See Figure 306.

Figure 307

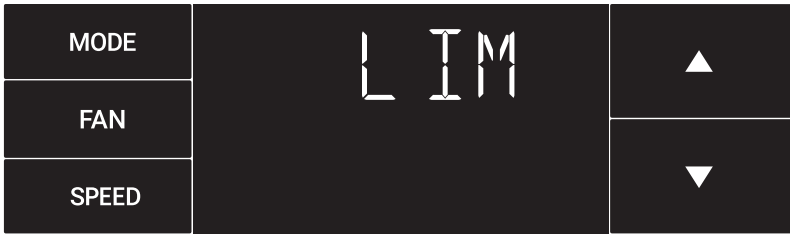

Figure 308

Figure 309

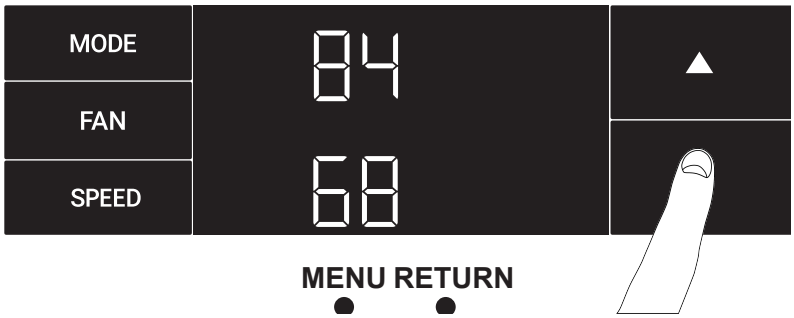

OPERATION

User Interface

The TM Menu (Timer)

This is the TM menu used to set a timer. See Figure 310.
In the menu, you set the current time using the arrow buttons. See Figure 311. (Note: These two "set clock" steps will be skipped if the unit is already connected to Wi-Fi.)
First, set the hour.
Using the MENU button, you switch to the minutes and complete setting the time. See Figure 306.
You select your mode. Either cool, heat, or auto. Toggle these using the mode button. See Figure 312. (Note: cooling-only models skip this step.)
The process is the same for all three modes. Auto mode will be shown as the example.

Figure 310

Figure 311

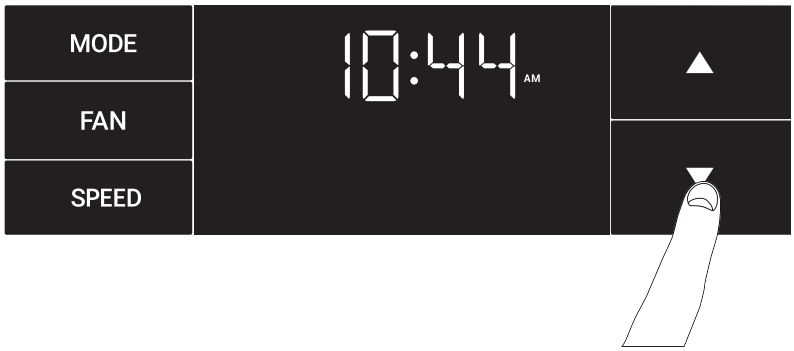

Figure 312

OPERATION

User Interface

The TM Menu (Timer) continued

Auto mode selected. See Figure 313.
Set the cool setpoint for your first timer period using the arrow buttons. The cooling mode timer only sets the cool setpoint. See Figure 314.
Next, set the heat setpoint for your first timer period. The heating mode timer only sets the heat setpoint. See Figure 315.
Note: The auto mode timer sets both the cool and heat setpoint.
Set the time to start the first timer period. See Figure 316.

Figure 313

Figure 314

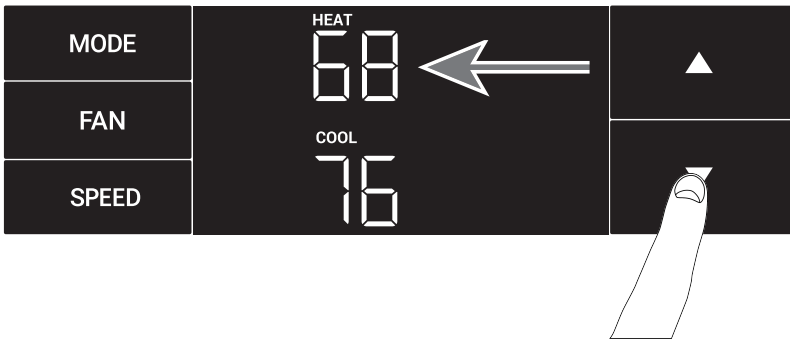

Figure 315

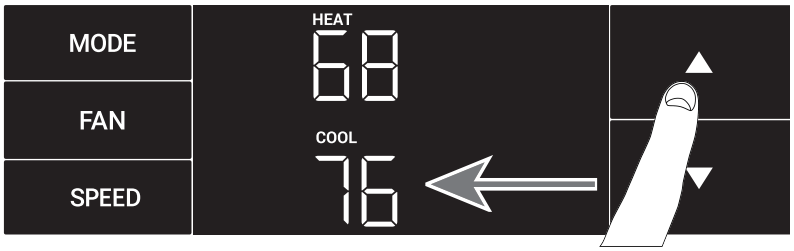

Figure 316

OPERATION

User Interface
The TM Menu (Timer) continued

Set the cool setpoint for the second scheduled timer. See Figure 317.

Set the heat setpoint for the second timer.

Set the time to start the second timer period. See Figure 318.

Press the MENU button to complete the time timer setup.
See Figure 306.

Figure 317

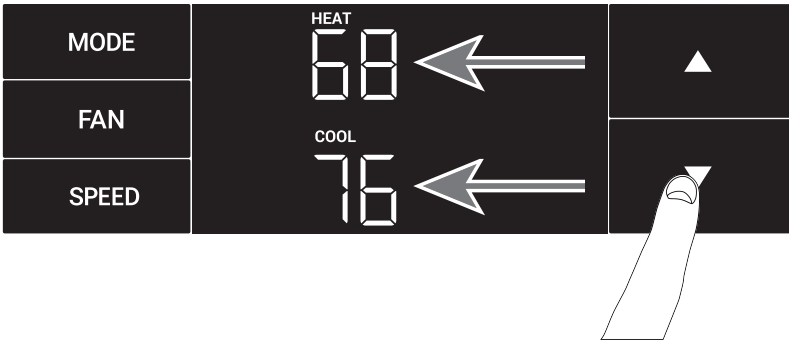

Figure 318

OPERATION

User Interface

The F-C Menu (Fahrenheit/Celsius)

This menu is used to toggle between Fahrenheit and Celsius. See Figure 319.

Using the arrow buttons on the right side switches it from Fahrenheit to Celsius. See Figures 320 and 321.

Figure 319

Figure 320

Figure 321

OPERATION

User Interface

The Lock Menu

This menu is used to lock the settings with a four(4) digit passcode.
This is the Lock Menu. See Figure 322.
The menu lock is defaulted to off. Use the arrows to toggle between off and on. See Figure 323.
This is LOCK on. See Figure 324.
Set the first digit of the password using the arrow buttons. Use the menu button to proceed to the next digit. See Figures 306 and 325.
Repeat the previous step for the remaining three(3) digits.

NOTICE

Be Sure to write down your passcode if you activate this feature.

___ ___ ___ ___

Please contact Technical Support if you have lost your lock code.

1-800-541-6645

Figure 322

Figure 323

Figure 324

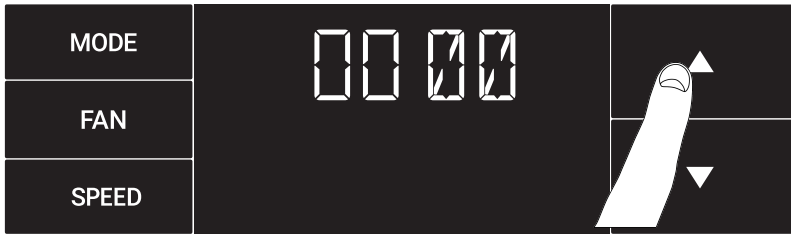

Figure 325

OPERATION

User Interface

The Lock Menu continued

The ON on the right side of the display shows the lock function is active. See Figure 326.
To go back into the menu, select the menu button again. See Figure 306.
Enter the password in the same manner it was created. See Figure 327.
Entering the correct password will give the user access to all of the sub-menus. See Figure 328
Accessing the lock menu will allow you to toggle lock OFF if needed. See Figure 329

Figure 326

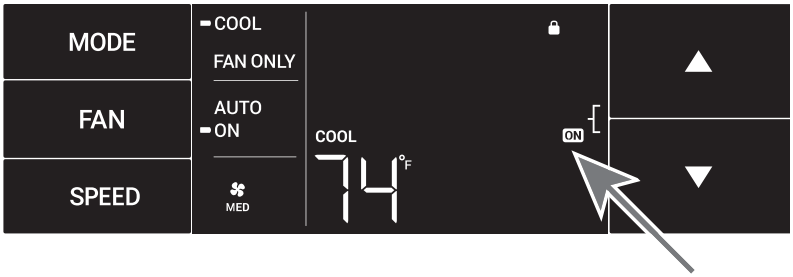

Figure 327

Figure 328

Figure 329

OPERATION

User Interface

The diAG Menu

This menu is used to access the diagnostic codes. See Figure 330.

Selecting this sub-menu shows the E that represents “Error.” See Figure 331.

Toggle through the error codes using the arrow keys. See Figure 332.

Figure 330

Figure 331

Figure 332

OPERATION

User Interface

The CnCT Menu (WiFi Connection)

This menu is used to turn on Wi-Fi connection.
This is the CnCT menu. See Figure 333
Pressing the menu button will activate Wi-Fi. See Figure 306.
To setup WiFi, refer to Wi-Fi setup instructions.
The Wi-Fi symbol in the top right corner of the display shows Wi-Fi connection is on. See Figure 334.

Figure 333

Figure 334

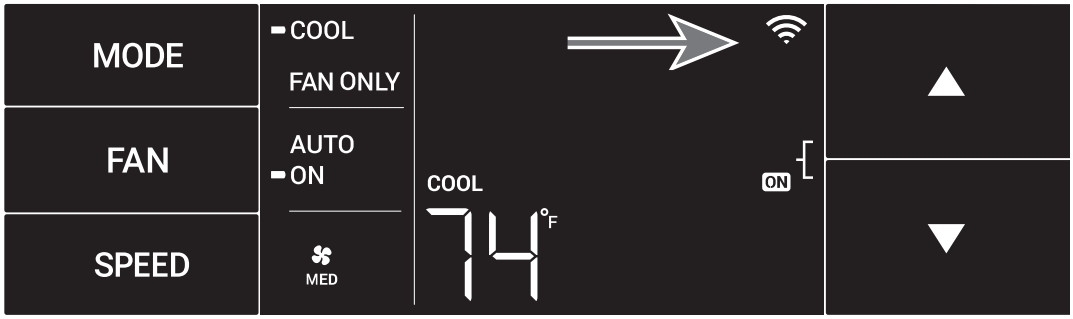

OPERATION

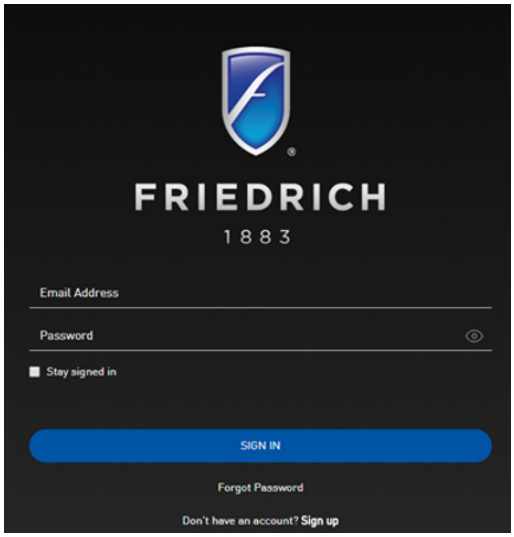

Step 3 (Login)

Wi-Fi Set Up Instructions

Below are the set-up instructions for Wi-Fi to use your unit wirelessly. Follow the instructions below:

1. Write down the following information prior to beginning this process (If you do not know this information you can check your router or contact your internet provider)

a. WI-FI Network Name (SSID)_____

b. WI-FI Network Security Type (Open, wep, wpa, wpa2) _____

c. WI-FI Network Password _____

2. Using a mobile device such as a smartphone or laptop, navigate to www.FriedrichConnect.com.

NOTE: If you do not have an account with FriedrichConnect you will be given the option to create a new account.

3. Sign-in using your username and password.

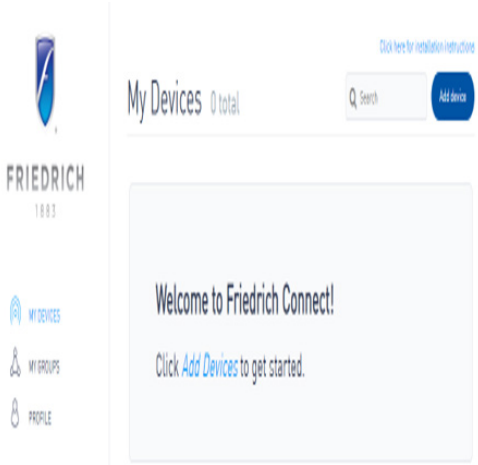

Step 4 (Add Device)

4. Click the "Add Device" button.

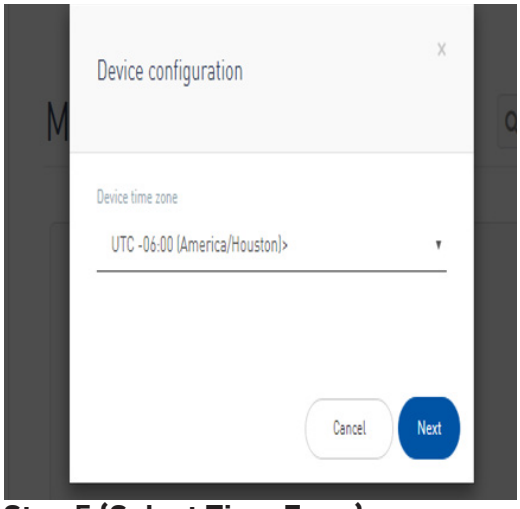

Step 5 (Select Time Zone)

5. Select the time zone the device is located in and click the "Next" button.

Wi-Fi SET UP INSTRUCTIONS (CONT)

6. To start the setup process click the menu button on the Control Panel of your Wallmaster model. See figure 307.

NOTE: If the Display is not illuminated, you will need to need click the menu button to illuminate the Display and then click it again to start the setup process.

7. Using the up and down arrows, navigate to the CnCT screen.

Steps 7 (Get to the CnCT Screen)

8. Click the menu button (see figure307) , this will begin the setup process for your Friedrich Connect enabled device.

NOTE: When the setup process starts, the WI-FI symbol will begin to flash. This indicates the A/C unit is trying to connect to your Wi-Fi network

NOTE: Once the setup process has been started, you will have five minutes to complete the setup. If the setup can not be completed in five minutes the system will rest and you will need to restart the process.

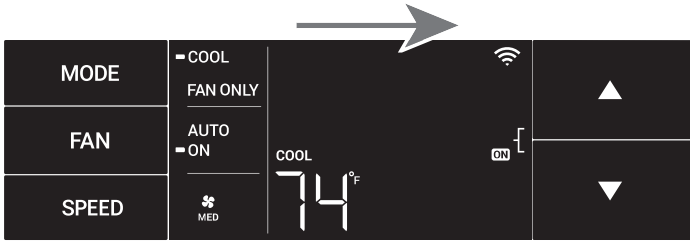

Step 8 (Begin the Setup Process)

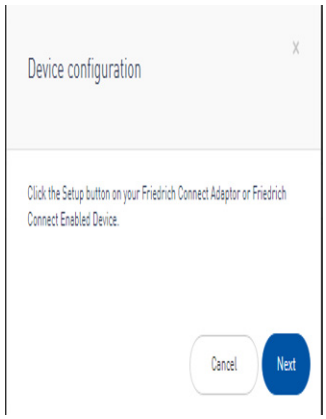

Step 9 (Click Next)

9. After the Wi-Fi symbol starts blinking, click the "Next" button on your mobile device.

NOTE: If the Wi-Fi setup is not completed on the first attempt, you may need to reset the Air Conditioning control unit. To accomplish this, turn the unit off, and unplug the Air Conditioning unit for a minimum of 15 seconds. Plug the unit back in and start the setup process over.

Wi-Fi SET UP INSTRUCTIONS (Continued)

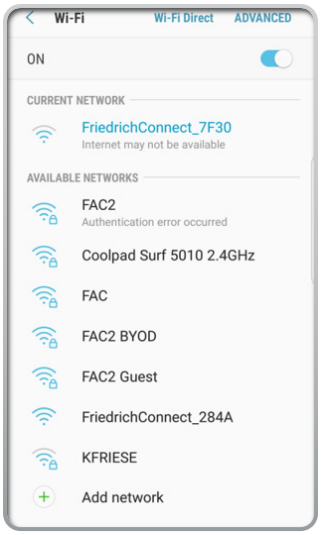

Step 10 (Connect WiFi to "Friedrich")

10. Go to the Wi-Fi settings on your mobile device and connect to "FriedrichConnect_xxxx" network. (xxxx is the network name of the Friedrich unit)

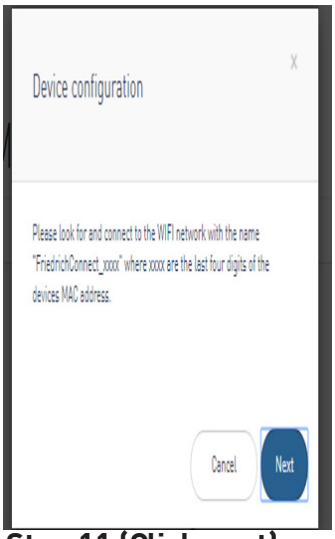

Step 11 (Click next)

11. Go back to the Friedrich instructions on your mobile device and click next.

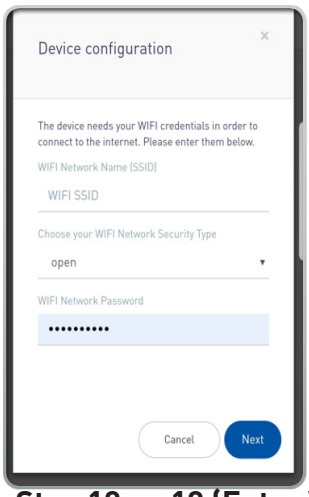

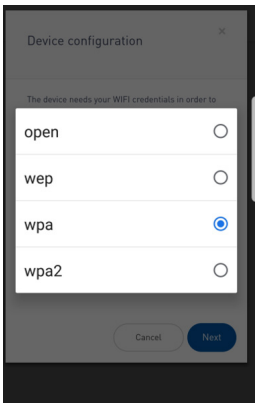

Step 12 an 13 (Enter WiFi Credentials)

12. A screen will appear asking you to enter your Wi-Fi credentials.

13. Enter the information as you recorded it at the beginning of the process.

NOTE: Your device may auto populate the fields incorrectly.

NOTE: Be sure to enter the WIFI SSID, Network Security Type, and Wi-Fi network password exactly as you recorded them.

NOTE: These fields are case-sensitive.

OPERATION

Wi-Fi SET UP INSTRUCTIONS (Continued)

14. Click next.

NOTE: You will receive a pop up box message stating "Credentials successfully saved. Please connect back to your Wi-Fi network and click "Next".

NOTE: You will receive a message (Waiting for network connection).

15. Go back to the Wi-Fi settings on your mobile device and connect back to your Wi-Fi network.

16. Go back to the Friedrich instructions on your mobile device and click next.

NOTE You will receive a message stating "Looking for recently added device. It will appear in the list ready. Please wait, this may take up to 3 minutes".

NOTE: Please wait and do not close out the box that appears.
If the box is closed before you get a successful message and you do not see your device,
(Friedrich a/c under my devices)
then you will have to restart the setup process again due to the unit not being linked to your FriedrichConnect account.

NOTE: It will connect to the Friedrich unit before the 3 minute mark in most cases however it may take up 3 minutes to be connected. Once it is connected you will receive a successfully connected box.

NOTE: Your Home Screen Wi-Fi symbol will stop flashing and will show steady.

NOTE: A GREEN symbol will appear under the "Status" details and the name of your Friedrich unit which will appear with a number.
for example: (62601032R01184660025)

Wi-Fi TROUBLESHOOTING TIPS

1) If you received this error message
"Error in association process: Request has been terminated Possible causes: the network is offline, Origin is not allowed by Access-Control-Allow-Origin, the page is being unloaded, etc."
a.This means your Wi-Fi (internet connect) has gone off online.
b. Check your Wi-Fi signal strength, reconnect service to your router or restart your router depending on your internet services.
c. Reset your Air Conditioning unit by turning off the power and then unplugging the unit for a minimum of 5 seconds.
d. Log back into your account and restart the set up process.

2) If you are on the last step where it states
"Looking for recently added device. It will appear in the list when ready. Please wait , this may take up to 3 minutes. Then a message pops up below that states "Unable to find device. Please double check the WI-FI SSID and password and try again".
This means the consumer has entered the wrong WI-FI network name (SSID) or password.
a. Reset your Air Conditioning unit by turning off the power and then unplugging the unit for a minimum of 5 seconds.
b. Log back into your account and restart the set up process.

For More information visit Friedrich.com

OPERATION

Control Panel

SYSTEM - The MODE button allows you to sequentially select up to four modes of operation:

AUTO	Available on select models
COOL	
HEAT	Available on select models
FAN ONLY	

AUTO FAN (No Cooling Demand)

When in AUTO mode, the fan only operates when the system has a demand to cool or heat the room.

In the ON fan mode, the fan operates all the time. The system periodically cools or heats the fan's airflow but the flow of air does not stop.

UP and DOWN Arrows - Pressing either an UP or DOWN button changes the system's setpoint (desired room temperature). These buttons are also used to make system parameter changes later in this manual.

One press equals 1 degree of change in Fahrenheit mode. One press equals 0.5 degree change in Celsius mode.

TIMER

The timer can be engaged or disengaged from the control panel. This is done by pressing or holding the UP and DOWN arrows simultaneously for three seconds.

OTHER FUNCTIONS

°F – °C Select

To switch from degrees Fahrenheit (F) to Celsius (C), press the MENU button and enter the F-C sub-menu.

FAN SPEED - Depending on your model, the FAN SPEED button allows you to toggle between three or four modes of operation: LOW, MEDIUM, HIGH and MAX.

Alerts

When the filter needs to be cleaned or replaced, the CHECK FILTER icon displays. Refer to Routine Maintenance for filter maintenance requirements.

The alert can be dismissed by pressing the FAN and SPEED buttons for 3 seconds.

Lock Control Panel

To lock/unlock the front panel controls, navigate to the "LOCK" sub-menu found after clicking the MENU button. The lock requires a four digit pass code to lock/unlock the unit. This pass code will be required to enter the menu to unlock the unit. The LOCK icon illuminates to indicate the locked status.

The LOCK icon disappears to indicate unlocked status.

External Control Status

The Wi-Fi icon illuminates to indicate that the system is receiving a Wi-Fi connection. The Wi-Fi icon also provides information about the signal strength.

Advanced Functions

The functions mentioned in the following section may or may not be available depending on the air conditioner model.

Modify the TIMER Function

Navigate to the TIME menu to set the timer.

OPERATION

Remote Control

Remote Control - Refer to Figure 340A during operation description.

Getting Started - Install two (2) AAA batteries in the battery compartment located on the back of the unit.

Operation - The remote control should be within 25 feet of the air conditioner for operation (refer to Figure 340B for effectiveness). Press the power button to turn the remote on. The remote will automatically power off after 15 seconds if the buttons are not being pressed. The remote must be on to control the unit.

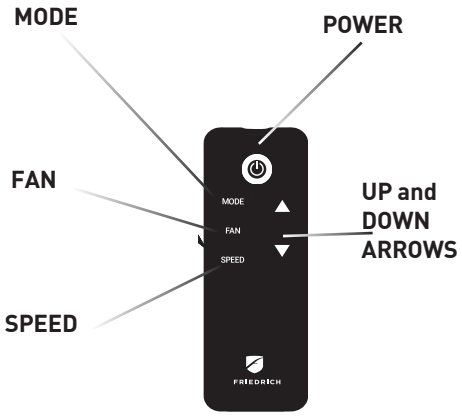

FIgure 336 (Remote Control)

POWER Button - Turns remote and unit on and off.

MODE Button - Allows the user to sequentially select the following: AUTO, COOL, HEAT, and FAN ONLY operations. When the button is pressed, the display indicates which mode has been selected via a display message. Note that when the heating function is not available, the system will automatically skip the HEAT mode.

FAN Button - Selects between automatic (AUTO FAN) or CONTINUOUS operation. In the AUTO FAN mode, the fan only turns on and off when the compressor operates or the heat function is enabled.

NOTE: AUTO FAN is not available in the FAN ONLY Mode, the display indicates CONTINUOUS. In the CONTINUOUS mode, fan speed is determined by your selection on the FAN SPEED button.

SPEED Button - Used to sequentially select new fan speed, plus AUTO operation. When the FAN SPEED button is pressed, the fan speed icon (triangle) changes to indicate the new speed level. Fan speed automatically varies depending on the set temperature on the control panel and the actual room temperature. For example, if there is a big difference between your set temperature and the actual room temperature, the system fan speed increases to HIGH. It remains at this speed until the room temperature matches the set temperature.

UP and DOWN Arrows - Pressing either the UP or DOWN button changes the desired room temperature. The factory preset lower and upper limits are 60°F (16°C) and 99°F (37°C). These buttons are also used to navigate between function options when using the User Menu or Maintenance Mode.

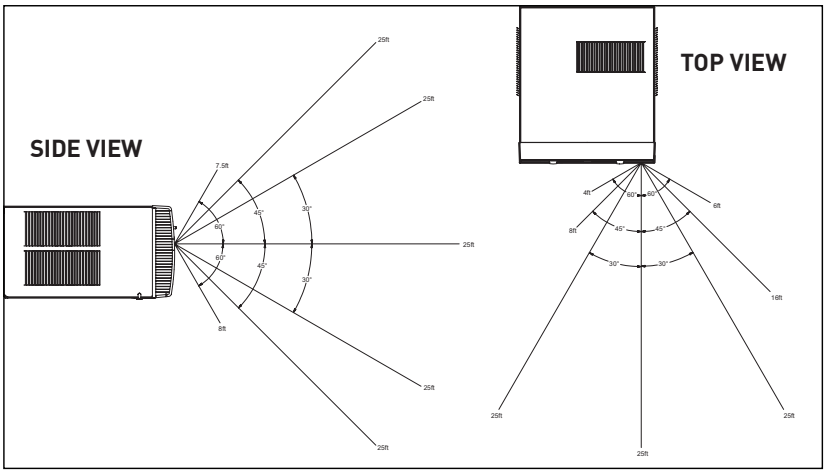

Figure 337 (Remote Control Effectiveness)

Remote Effectiveness

Handheld Remote - Has an operating range of up to 25 ft. The infrared remote control signal must have a clear path to transmit the command to the air conditioning unit. The remote signal has some ability to "bounce" off of walls and furniture similar to a television remote control. The diagram below shows the typical operating range of the control in a standard room with 8 ft high ceilings.

Operation

Unit

Cooling

Your air conditioner is designed to cool in warm weather when the outside temperature is above 60 °F (15.6 °C) and below 115 °F (46.1 °C), so it won't cool a room if it is already cool outside. If you want to cool a room in the spring or fall, select the FAN ONLY mode and set the Fresh Air/Exhaust air control to Fresh Air. This will bring in a supply of cooler outside air.

Condensation is normal

Air conditioners actually pump the heat and humidity from your room to the outside. Humidity becomes water, and your air conditioner will use most of the water to keep the outside coil cool. If there is excessive humidity, there may be excess water that will drip outside. This is normal operation.

Frosting

This usually occurs because of insufficient airflow across the coils, a dirty filter, cool damp weather, or all these. Set the SYSTEM mode to FAN ONLY and the frost will disappear. Setting the thermostat a little warmer will probably prevent the frosting from recurring.

Noises

All air conditioners make some noise. Friedrich units are designed to operate as quietly as possible. An air conditioner mounted in a wall is quieter than one mounted in a window. It is important to ensure that the chassis seal gasket is properly installed.

Heat pumps operate differently

If your unit is a heat pump model (WHT12A33A), there are some things that you will want to be aware of. Some functions of a heat pump differ from your unit when it is used for heating:

1. It is normal for ice to form on the outdoor coil of the heat pump. Moisture in the outside air, passing over the coil when very cold, will form ice.

Compressor and Reversing Valve Control

Active Mode	Compressor	Reversing Valve
Cooling	On	De-Energized
Heat - Pump	On	Energized
Heat - Electric	Off	
Fan Only	Off	

Figure 338 (Compressor Operation)

Reversing Valve
The reversing valve stays in the last state until a call for heat or cooling .
The reversing valve only changes when required to provide coooling or heat pump. Leave the reversing valve in it's last state until it's required to change.

OPERATION

Unit Cooling Mode

Once the ambient temperature rises past the cool demand threshold (Cool Set Point + 1.5 ˚F) (see figure below), and the compressor is not locked out, the cooling cycle begins. As shown in the figure below, the fan is started 5 seconds prior to the compressor. Once the ambient temperature has been lowered to the cool set point (Cool Set Point minus .25 ˚F), the cooling cycle starts to terminate by shutting off the compressor. After a 30 seconds delay, the fan is shut off. (See figure below for graphic details)

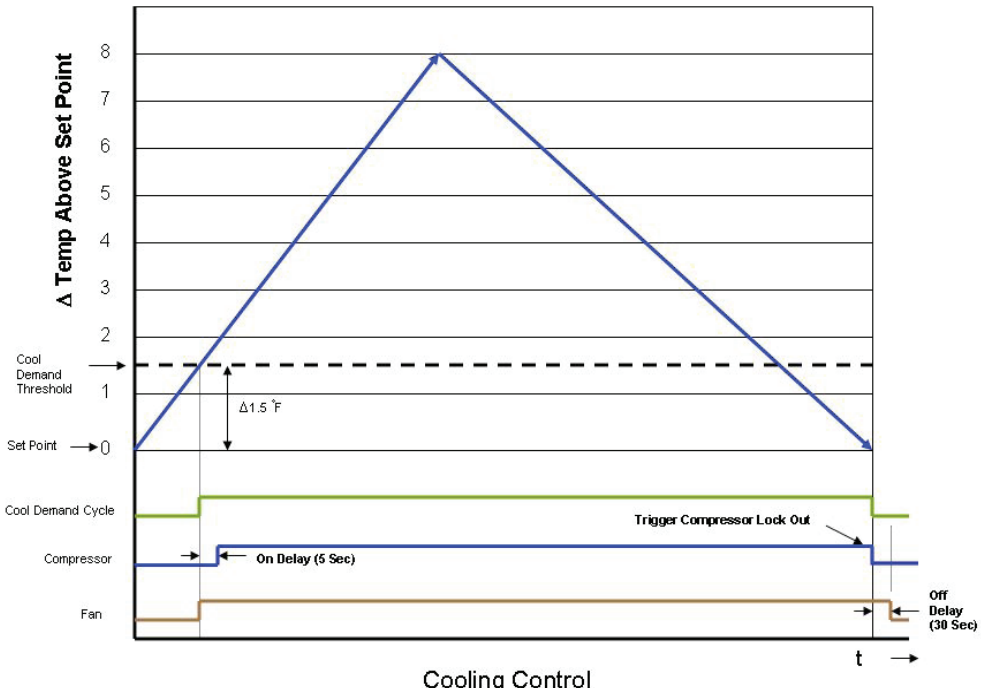

Figure 339 (Cooling Control)

Unit Heating Mode Control Operation

There are two heating methods: Heat Pump and Electric Resistance Heat.
There are 2 types of units that provide heating:
Heat Pump with Electric Heat (WHT12A33A)
Cool with Electric Heat (WET10A33A, WET12A33A, WET16A33A)

Unit Heat Control Operation - HeatPump With Electric Heat

This heating is more complex due to the possibility of two heating methods. If the ambient indoor temperature is be-low the heat demand threshold (1.5˚F below the heat set point temperature), and the compressor is not locked out, turn on compressor. If the ambient indoor temperature is 0.25˚F above the heat set point turn off the compressor..

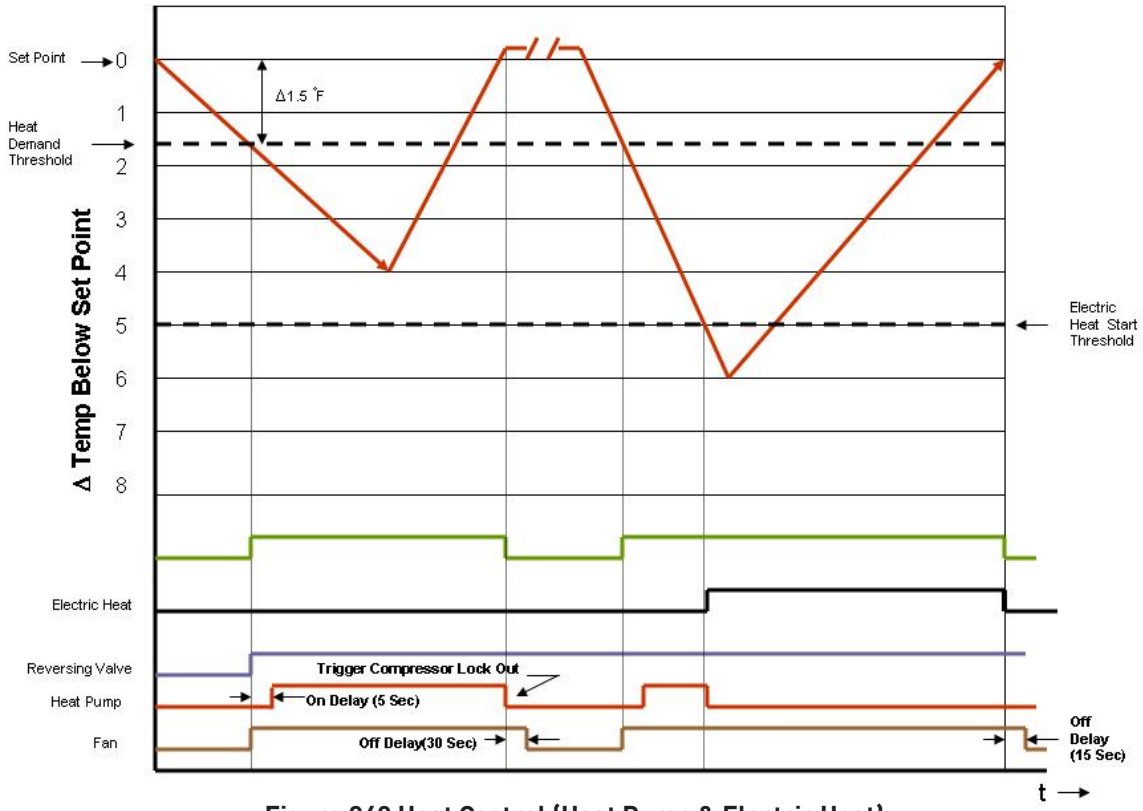

Figure 340 Heat Control (Heat Pump & Electric Heat)

If the compressor is locked out & electric heat is available:

1. Turn on the electric heat until the compressor is not locked out.
2. After lockout, turn off the electric heat, wait 5 seconds, then turn on the compressor.

If Electric Heat is Available:After the Heat button is initially pressed, the unit will run the electric heater first until the initial set point is satisfied **(Hot Start Feature**). After the initial start, the unit will switch to Heat Pump heat and decide between Heat Pump heat and Electric heat based on the following two monitored conditions:

Condition 1

If the outdoor coil temperature sensor drops to 30 ˚F or less for 2 consecutive minutes, the unit will switch to electric heat if available. Thereafter, the unit will switch back to Heat Pump heat if the outdoor coil temperature sensor rises to 45 ˚F or greater.

If Electric Heat is not available (out of order) and the outdoor coil temperature sensor drops to 30 ˚F or less for 2 consecutive minutes, then the compressor and fan will turn off. Thereafter, the unit will switch back to Heat Pump heat if the outdoor coil temperature rises to 45 ˚F or greater.

Condition 2

If the delta (set point temperature minus the ambient indoor temperature) is greater than 5 ˚F, then the unit will switch to electric heat, if available. The unit will continue to operate with electric heat until the heat demand is satisfied. Note that the electric heat switches on after the delta temp passes 5°F and the heat pump switches off. Also note that the electric heat will run until the heat demand is satisfied. When another heat demand cycle is initiated, the heat pump will run unless the delta temp is greater than the electric heat threshold.

Unit Heat Control Operation - Heat Pump With Electric Heat (Continued)

Automatic Emergency Heat

If the sealed system fails with a bad reversing valve or anything that causes the indoor coil to get colder than the indoor ambient temperature:

1) If the indoor coil thermistor senses a 5 degree temperature drop as compared to the ambient temperature thermistor and this lasts up to 5 minutes, the control board will switch the unit to electric heat and continue heating with it.

2) At this point, error code 15 is generated; heat pump failure. Indoor coil temperature lower than indoor ambient temperature for 5 or more degrees for 5 consecutive minutes.

Note: It is Ok to continue to use the unit with the electric heater until the heat pump is repaired.

Heat Control Operation - Electric Heat Only

When in the Heat mode, with and without Fan Mode Auto (Fan cycling):
If the indoor ambient temperature is below the Heat Demand Threshold (Heat Set Point minus 1.5 ˚F), turn on electric heat. If Ambient is 0.3 ˚F above the Heat Set Point turn off the electric heat.

System Mode Auto

This mode provides automatic change over between cool and heat. The auto mode runs based on the room ambient temperature vs. the Demand Thresholds. It is only available in Heat-Cool Unit.

Notes:

There is a buffer zone between the cool and heat set points where no heating or cooling is allowed to occur. It is critical that the Cool Demand Threshold be greater than the Heat Demand Threshold by a minimum of 3° while in the Auto System Mode. For example, if a user enters a value for the Auto Cooling Set Point that violates the minimum delta 3° rule, the Auto Heating Set Point will adjust accordingly.

Automatic Change Over Delay (Cool with Heat Units)

The change over delay ensures that any system heating or cooling over shoot does not trigger an opposite demand cycle. The change over delay = 15 min. This timer blocks the opposite demand cycle from running until the timer expires. As an example, if the last demand was a cool cycle, and another cool cycle is requested, the timer will not block the request. However, if the last demand cycle was a cool cycle, and heat cycle is requested, the timer will block the request until the change over delay is expired.

Compressor Lock Out Time

The lockout feature ensures that the compressor is de-energized for a period of time. The timer varies randomly from 180 to 240 seconds
The compressor lockout is initiated every time the compressor is "off" due to:

(1) Satisfying the temperature set point
(2) Changing mode to fan only or heat
(3) Turning the unit off
(4) Control is first plugged in or power is restored after failure
(5) Line power is restored from a brown out condition

Cooling Fan Delay

Fan cycle/Auto mode only
When unit cycles cooling ON – starts the fan 5 seconds EARLY. When unit cycles cooling OFF – DELAYS the fan off for 30 seconds.

OPERATION

Heating Fan Delay

This is only for fan Mode Auto (Fan cycles with cool/heat operation) and not for continuous fan mode. When unit cycles Heating ON – starts the fan 5 seconds EARLY. When unit cycles Heating OFF – DELAYS the fan off for 15 seconds.

Fan Speed Change Delay

Relay activation is delayed by a minimum number of seconds. The default for this value is 2 seconds and is used to eliminate relay chatter.

System Mode Fan Only

The fan is turned on and runs at the specified manually set speed.
Only the Fan is turned on. Cool or Heat operation are off.
(This is different than FAN MODE ON where the fan is on with the cool or heat operation).

Fan Only Rules

1. If the SYSTEM FAN ONLY MODE is selected, the Auto fan mode is disabled, and the fan mode is forced to continuous. In addition, the auto fan speed is disabled. If the user presses the fan speed key, the menu will skip over the auto selection. The set point temperature display is off.
2. Any fan speed may be manually selected during Fan Only Mode.

Fan Operation (Front Panel Mode)

Heat – Cool – Auto – Fan Only
Cooling only models (Model numbers with the prefix KCS or KCM) have 4 speeds. All other Models have 3 speeds.

Fan ICON Detail

The system may have a 3 or 4 speed fan. The Fan Speed ICON will Display as LOW, MED, HI, or MAX depending on which speed is selected .

OPERATION

Refrigeration Sequence Of Operation

A good understanding of the basic operation of the refrigeration system is essential for the service technician. Without this understanding, accurate troubleshooting of refrigeration system problems will be more difficult and time consuming, if not (in some cases) entirely impossible. The refrigeration system uses four basic principles (laws) in its operation they are as follows:

1. "Heat always flows from a warmer body to a cooler body."

2. "Heat must be added to or removed from a substance before a change in state can occur"

3. "Flow is always from a higher pressure area to a lower pressure area."

4. "The temperature at which a liquid or gas changes state is dependent upon the pressure."

The refrigeration cycle begins at the compressor. Starting the compressor creates a low pressure in the suction line which draws refrigerant gas (vapor) into the compressor. The compressor then "compresses" this refrigerant vapor, raising its pressure and its (heat intensity) temperature.

The refrigerant leaves the compressor through the discharge Line as a hot High pressure gas (vapor). The refrigerant enters the condenser coil where it gives up some of its heat. The condenser fan moving air across the coil's finned surface facilitates the transfer of heat from the refrigerant to the relatively cooler outdoor air.
When a sufficient quantity of heat has been removed from the refrigerant gas (vapor), the refrigerant will "condense" (i.e. change to a liquid). Once the refrigerant has been condensed (changed) to a liquid it is cooled even further by the air that continues to flow across the condenser coil.

The design determines at exactly what point (in the condenser) the change of state (i.e. gas to a liquid) takes place. In all cases, however, the refrigerant must be totally condensed (changed) to a Liquid before leaving the condenser coil.

The refrigerant leaves the condenser Coil through the liquid line as a warm high pressure liquid. It next will pass through the refrigerant drier (if equipped). It is the function of the drier to trap any moisture present in the system, contaminants, and large particulate matter.

The liquid refrigerant next enters the metering device. The metering device is a capillary tube. The purpose of the metering device is to "meter" (i.e. control or measure) the quantity of refrigerant entering the evaporator coil.
In the case of the capillary tube this is accomplished (by design) through size (and length) of device, and the pressure difference present across the device.

Since the evaporator coil is under a lower pressure (due to the suction created by the compressor) than the liquid line, the liquid refrigerant leaves the metering device entering the evaporator coil. As it enters the evaporator coil, the larger area and lower pressure allows the refrigerant to expand and lower its temperature (heat intensity). This expansion is often referred to as "boiling" or atomizing. Since the unit's blower is moving indoor air across the finned surface of the evaporator coil, the expanding refrigerant absorbs some of that heat. This results in a lowering of the indoor air temperature, or cooling.

The expansion and absorbing of heat cause the liquid refrigerant to evaporate (i.e. change to a gas). Once the refrigerant has been evaporated (changed to a gas), it is heated even further by the air that continues to flow across the evaporator coil.

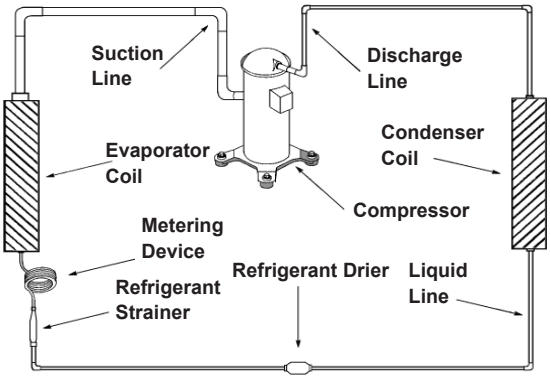

The particular system design determines at exactly what point (in the evaporator) the change of state (i.e. liquid to a gas) takes place. In all cases, however, the refrigerant must be totally evaporated (changed) to a gas before leaving the evaporator coil.

The low pressure (suction) created by the compressor causes the refrigerant to leave the evaporator through the suction line as a cool low pressure vapor. The refrigerant then returns to the compressor, where the cycle is repeated.

Figure 341 (Refrigeration Sequence Of Operation)

ROUTINE MAINTENANCE

Remove And Install The Front Cover and Filter

⚠ WARNING

ELECTRIC SHOCK HAZARD
Disconnect power to the unit before servicing. Failure to follow this warning could result in serious injury or death.

Remove the decorative front cover.
1. Remove the FRONT PANEL. Using the handles, pull panel out until it is released from the two retaining snaps. Place the cover aside carefully.
2. Remove the filter by pulling it from the handles releasing it from the slots on the frame. Wash the filter with water to remove all dust and then rinse, remove water excess and let it dry. Do not twist. Remove the intake grill by applying slight outward pressure on the chassis removal handles and popping grill out out of slots.
3. Remove the 4 screws and remove the decorative front assembly**.**

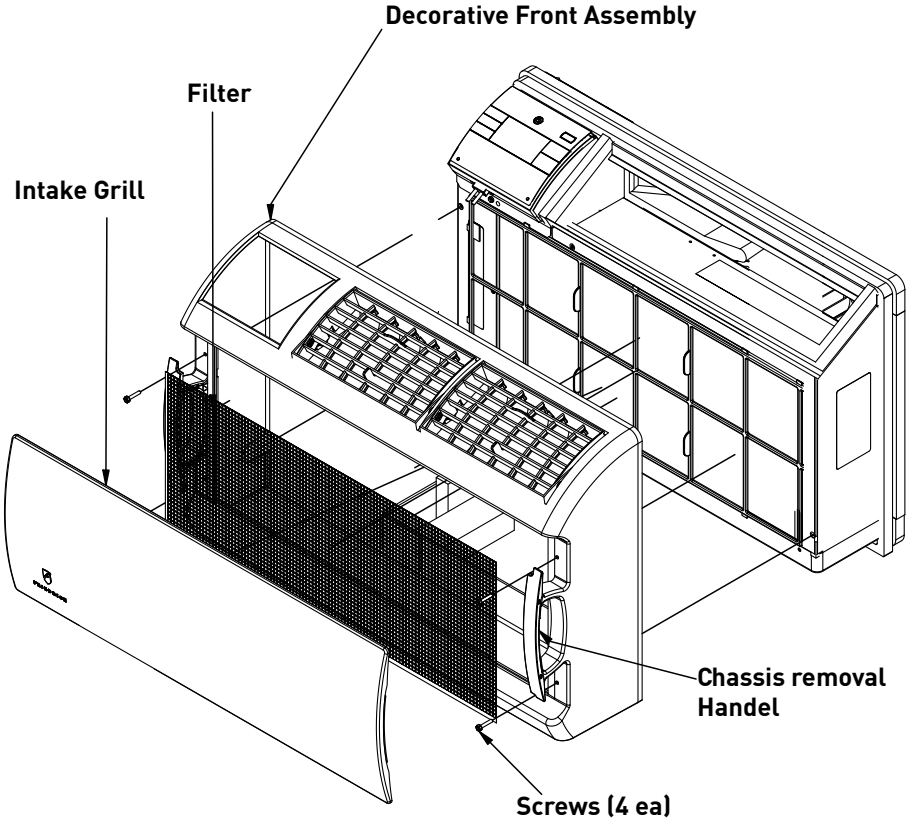

Figure 401 (Remove and Install the Decorative Front Assembly)

Install the decorative front cover.
1. Install the front decorative assembly with 4 screws **.**
2. Install the filter by inserting each tab in their respective slot.
3. Install Intake grill by applying slight outward pressure on the chassis removal handle.

Routine Maintenance

Coils & Chassis

NOTE: Do not use a caustic cleaning agent on coils or base pan. Use a biodegradable cleaning agent and degreaser. The use of harsh cleaning materials may lead to deterioration of the aluminum fins or the coil end plates.

The indoor coil and outdoor coils and base pan should be inspected periodically (annually or semi-annually) and cleaned of all debris (lint, dirt, leaves, paper, etc.) as necessary. Under extreme conditions, more frequent cleaning may be required. Clean the coils with and base pan with a coil comb or soft brush and compressed air or vacuum. A low pressure washer device may also be used; however, you must be careful not to bend the aluminum fin pack. Use a sweeping up and down motion in the direction of the vertical aluminum fin pack when pressure cleaning coils.

NOTE: It is extremely important to insure that none of the electrical and/or electronic parts of the unit get wet when cleaning. Be sure to cover all electrical components to protect them from water or spray.

Decorative Front

Use a damp (not wet) cloth when cleaning the control area to prevent water from entering the unit, and possibly damaging the electronic control.

The decorative front and the cabinet can be cleaned with warm water and a mild liquid detergent. Do NOT use solvents or hydrocarbon based cleaners such as acetone, naphtha, gasoline, benzene, etc.

The indoor coil can be vacuumed with a dusting attachment if it appears to be dirty. DO NOT BEND FINS. The outdoor coil can be gently sprayed with a garden hose.

The air filter should be inspected weekly and cleaned if needed by vacuuming with a dust attachment or by cleaning in the sink using warm water and a mild dishwashing detergent. Dry the filter thoroughly before reinstalling. Use caution, the coil surface can be sharp.

Fan Motor & Compressor

The fan motor & compressor are permanently lubricated and require no additional lubrication.

Wall Sleeve

Inspect the inside of the wall sleeve and drain system periodically (annually or semi-annually) and clean as required. Under extreme conditions, more frequent cleaning may be necessary. Clean both of these areas with an antibacterial and antifungal cleaner. Rinse both items thoroughly with water and ensure that the drain outlets are operating correctly. Check the sealant around the sleeve and reseal areas as needed.

Blower Wheel / Housing / Condensor Fan / Shroud

Inspect the indoor blower and its housing, evaporator blade, condenser fan blade and condenser shroud periodically (yearly or bi-yearly) and clean of all debris (lint, dirt, mold, fungus, etc.). Clean the blower housing area and blower wheel with an antibacterial / antifungal cleaner. Use a biodegradable cleaning agent and degreaser on condenser fan and condenser shroud. Use warm or cold water when rinsing these items. Allow all items to dry thoroughly before reinstalling them.

Electrical / Electronic

Periodically (at least yearly or bi-yearly) inspect all control components: electronic, electrical and mechanical, as well as the power supply. Use proper testing instruments (voltmeter, ohmmeter, ammeter, wattmeter, etc.) to perform electrical tests. Use an air conditioning or refrigeration thermometer to check room, outdoor and coil operating temperatures.

Air Filter

To ensure proper unit operation, the air filter should be cleaned at least monthly, and more frequently if conditions warrant. The unit must be turned off before the filter is cleaned.

REMOVE AND INSTALL THE CHASSIS

Remove and Install The Chassis

⚠ WARNING

ELECTRIC SHOCK HAZARD

Disconnect power to the unit before servicing. Failure to follow this warning could result in serious injury or death.

1. Remove the front grill. See Routine Maintenance Figure 401.
2. Remove the clamped drain hose from the nipple if installed.
3. Hold the cabinet stationary then use the hand grips on both ends of the decorative front assembly to pull the chassis out of the cabinet .

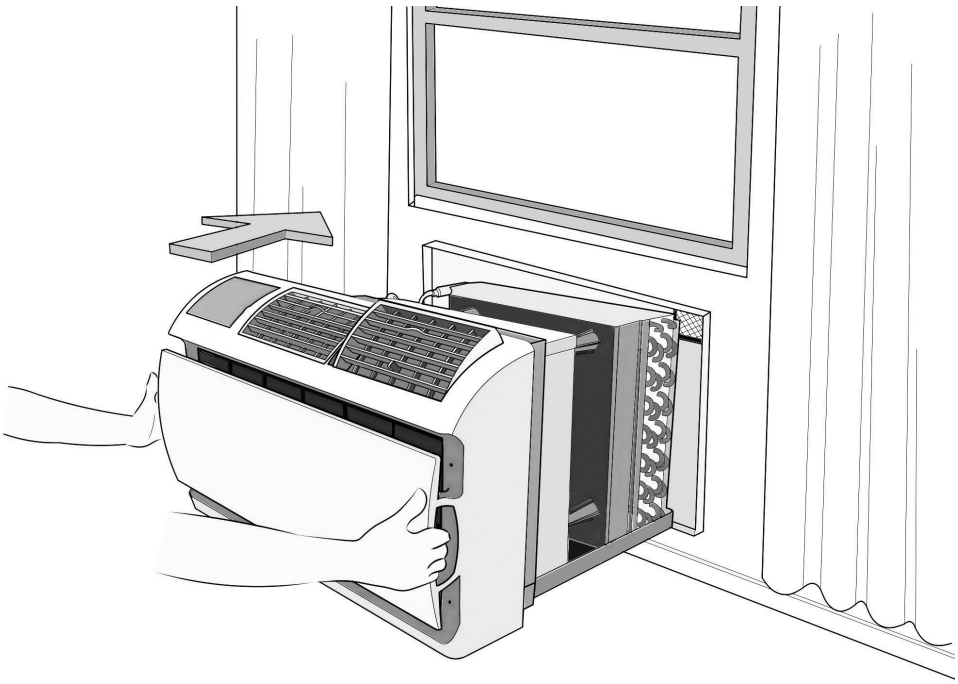

Figure 501 (Remove and Install the Chassis)

1. Carefully lift the chassis and set it into the cabinet.
2. Reinstall drain hose if installed.
3. Reinstall the front grill.

R-410A SEALED SYSTEM REPAIR

⚠ WARNING

Refrigeration system under high pressure

Do not puncture, heat, expose to flame or incinerate.

Only certified refrigeration technicians should service this equipment.

R410A systems operate at higher pressures than R22 equipment. Appropriate safe service and handling practicces must be used.

Only use gauge sets designed for use with R410A. Do not use standard R22 gauge sets.

The following is a list of important considerations when working with R-410A equipment

1. R-410A pressure is approximately 60% higher than R-22 pressure.
2. R-410A cylinders must not be allowed to exceed 125 F, they may leak or rupture.
3. R-410A must never be pressurized with a mixture of air, it may become flammable.
4. Servicing equipment and components must be specifically designed for use with R-410A and dedicated to prevent contamination.
5. Manifold sets must be equipped with gauges capable of reading 750 psig (high side) and 200 psig (low side), with a 500-psig low-side retard.
6. Gauge hoses must have a minimum 750-psig service pressure rating
7. Recovery cylinders must have a minimum service pressure rating of 400 psig, (DOT 4BA400 and DOT BW400 approved cylinders).
8. POE (Polyol-Ester) lubricants must be used with R-410A equipment.
9. To prevent moisture absorption and lubricant contamination, do not leave the refrigeration system open to the atmosphere longer than 1 hour.
10. Weigh-in the refrigerant charge into the high side of the system.
11. Introduce liquid refrigerant charge into the high side of the system.
12. For low side pressure charging of R-410A, use a charging adaptor.
13. Use Friedrich approved R-410A filter dryers only.

IMPORTANT

SEALED SYSTEM REPAIRS TO COOL-ONLY MODELS REQUIRE THE INSTALLATION OF A LIQUID LINE DRIER.

EQUIPMENT REQUIRED:

1. Voltmeter
2. Ammeter
3. Ohmmeter
4. E.P.A. Approved Refrigerant Recovery System
5. Vacuum Pump (capable of 200 microns or less vacuum.)
6. Acetylene Welder
7. Electronic Halogen Leak Detector capable of detecting HFC (Hydrofluorocarbon) refrigerants.
8. Accurate refrigerant charge measuring device such as:

a. Balance Scales - 1/2 oz. accuracy
b. Charging Board - 1/2 oz. accuracy

9. High Pressure Gauge - (0 to 750 lbs.)
10. Low Pressure Gauge - (-30 to 200 lbs.)
11. Vacuum Gauge - (0 - 1000 microns)
12. Facilities for flowing nitrogen through refrigeration tubing during all brazing processes.

EQUIPMENT MUST BE CAPABLE OF:

1. Recovering refrigerant to EPA required levels.
2. Evacuation from both the high side and low side of the system simultaneously.
3. Introducing refrigerant charge into high side of the system.
4. Accurately weighing the refrigerant charge introduced into the system.

R-410A SEALED SYSTEM REPAIRS

⚠ WARNING

RISK OF ELECTRIC SHOCK

Unplug and/or disconnect all electrical power to the unit before performing inspections, maintenances or service.

Failure to do so could result in electric shock, serious injury or death.

⚠ WARNING

HIGH PRESSURE HAZARD

Sealed Refrigeration System contains refrigerant and oil under high pressure.

Proper safety procedures must be followed, and proper protective clothing must be worn when working with refrigerants.

Failure to follow these procedures could result in serious injury or death.

Refrigerant Charging

NOTE: Because the refrigerant system is a sealed system, service process tubes will have to be installed. First install a line tap and remove refrigerant from system. Make necessary sealed system repairs and vacuum system. Crimp process tube line and solder end shut. Do not leave a service valve in the sealed system.

Proper refrigerant charge is essential to proper unit operation. Operating a unit with an improper refrigerant charge will result in reduced performance (capacity) and/or efficiency. Accordingly, the use of proper charging methods during servicing will insure that the unit is functioning as designed and that its compressor will not be damaged.

Too much refrigerant (overcharge) in the system is just as bad (if not worse) than not enough refrigerant (undercharge). They both can be the source of certain compressor failures if they remain uncorrected for any period of time. Quite often, other problems (such as low air flow across evaporator, etc.) are misdiagnosed as refrigerant charge problems. The refrigerant circuit diagnosis chart will assist you in properly diagnosing these systems.

An overcharged unit will at times return liquid refrigerant (slugging) back to the suction side of the compressor eventually causing a mechanical failure within the compressor. This mechanical failure can manifest itself as valve failure, bearing failure, and/or other mechanical failure. The specific type of failure will be influenced by the amount of liquid being returned, and the length of time the slugging continues.

Not enough refrigerant (undercharge) on the other hand, will cause the temperature of the suction gas to increase to the point where it does not provide sufficient cooling for the compressor motor. When this occurs, the motor winding temperature will increase causing the motor to overheat and possibly cycle open the compressor overload protector. Continued overheating of the motor windings and/or cycling of the overload will eventually lead to compressor motor or overload failure.

R-410A SEALED SYSTEM REPAIRS

⚠ WARNING

RISK OF ELECTRIC SHOCK

Unplug and/or disconnect all electrical power to the unit before performing inspections, maintenances or service.

Failure to do so could result in electric shock, serious injury or death.

⚠ WARNING

HIGH PRESSURE HAZARD

Sealed Refrigeration System contains refrigerant and oil under high pressure.

Proper safety procedures must be followed, and proper protective clothing must be worn when working with refrigerants.

Failure to follow these procedures could result in serious injury or death.

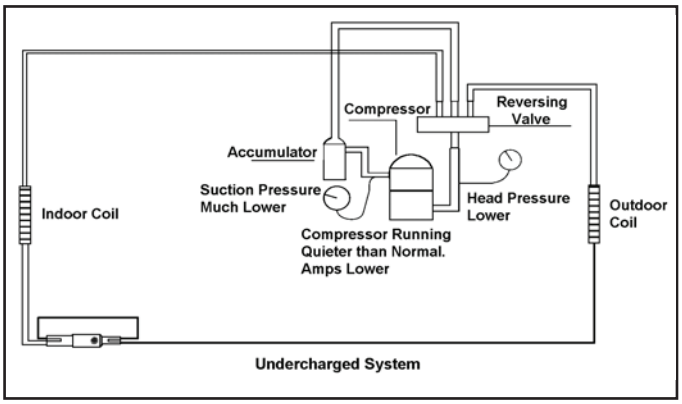

Undercharged Refrigerant Systems

An undercharged system will result in poor performance (low pressures, etc.) in both the heating and cooling cycle.

Whenever you service a unit with an undercharge of refrigerant, always suspect a leak. The leak must be repaired before charging the unit.

To check for an undercharged system, turn the unit on, allow the compressor to run long enough to establish working pressures in the system (15 to 20 minutes).

During the cooling cycle you can listen carefully at the exit of the metering device into the evaporator; an intermittent hissing and gurgling sound indicates a low refrigerant charge. Intermittent frosting and thawing of the evaporator is another indication of a low charge, however, frosting and thawing can also be caused by insufficient air over the evaporator.

Checks for an undercharged system can be made at the compressor. If the compressor seems quieter than normal, it is an indication of a low refrigerant charge.

A check of the amperage drawn by the compressor motor should show a lower reading. (Check the Unit Specification.) After the unit has run 10 to 15 minutes, check the gauge pressures. Gauges connected to system with an undercharge will have low head pressures and substantially low suction pressures.

Figure 601 (Undercharged System)

R-410A SEALED SYSTEM REPAIRS

⚠ WARNING

RISK OF ELECTRIC SHOCK

Unplug and/or disconnect all electrical power to the unit before performing inspections, maintenances or service.

Failure to do so could result in electric shock, serious injury or death.

⚠ WARNING

HIGH PRESSURE HAZARD

Sealed Refrigeration System contains refrigerant and oil under high pressure.

Proper safety procedures must be followed, and proper protective clothing must be worn when working with refrigerants.

Failure to follow these procedures could result in serious injury or death.

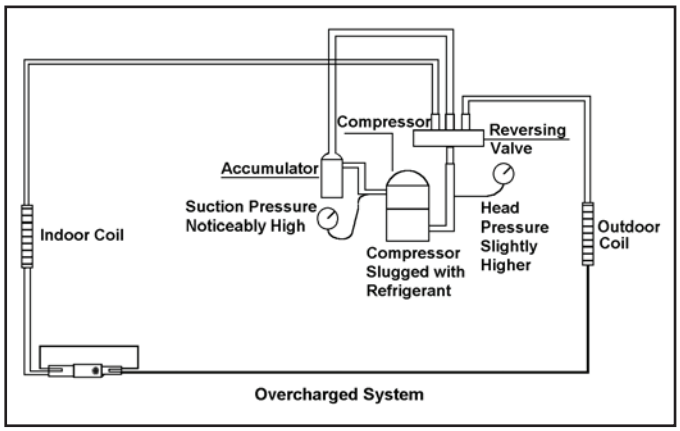

Figure 602 (Overcharged System)

Overcharged Refrigerant Systems

Compressor amps will be near normal or higher. Noncondensables can also cause these symptoms. To confirm, remove some of the charge, if conditions improve, system may be overcharged. If conditions don't improve, Noncondensables are indicated.

Whenever an overcharged system is indicated, always make sure that the problem is not caused by air flow problems. Improper air flow over the evaporator coil may indicate some of the same symptoms as an over charged system.

An overcharge can cause the compressor to fail, since it would be "slugged" with liquid refrigerant.
The charge for any system is critical. When the compressor is noisy, suspect an overcharge, when you are sure that the air quantity over the evaporator coil is correct. Icing of the evaporator will not be encountered because the refrigerant will boil later if at all. Gauges connected to system will usually have higher head pressure (depending upon amount of over charge). Suction pressure should be slightly higher.

R-410A SEALED SYSTEM REPAIRS

Restricted Refrigerant System

Troubleshooting a restricted refrigerant system can be difficult. The following procedures are the more common problems and solutions to these problems. There are two types of refrigerant restrictions: Partial restrictions and complete restrictions.

A partial restriction allows some of the refrigerant to circulate through the system.

With a complete restriction there is no circulation of refrigerant in the system.
Restricted refrigerant systems display the same symptoms as a "low-charge condition."

When the unit is shut off, the gauges may equalize very slowly.

Gauges connected to a completely restricted system will run in a deep vacuum. When the unit is shut off, the gauges will not equalize at all.

A quick check for either condition begins at the evaporator. With a partial restriction, there may be gurgling sounds at the metering device entrance to the evaporator. The evaporator in a partial restriction could be partially frosted or have an ice ball close to the entrance of the metering device. Frost may continue on the suction line back to the compressor.

Often a partial restriction of any type can be found by feel, as there is a temperature difference from one side of the restriction to the other.

With a complete restriction, there will be no sound at the metering device entrance. An amperage check of the compressor with a partial restriction may show normal current when compared to the unit specifi cation. With a complete restriction the current drawn may be considerably less than normal, as the compressor is running in a deep vacuum (no load.) Much of the area of the condenser will be relatively cool since most or all of the liquid refrigerant will be stored there.

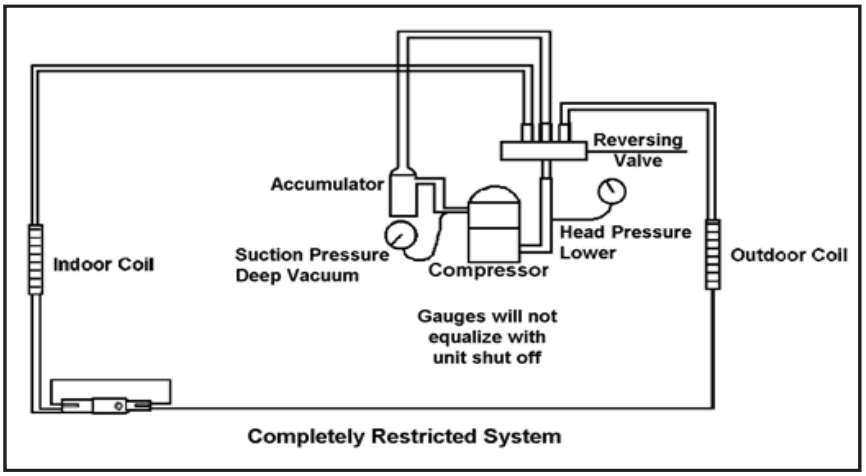

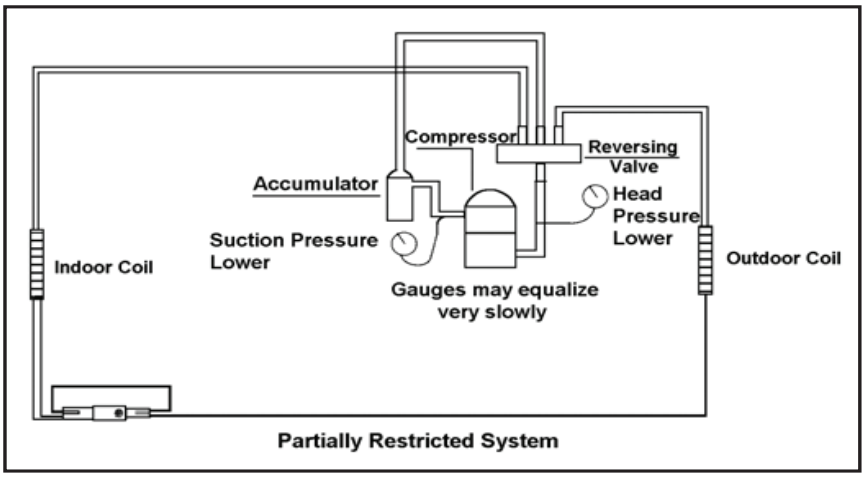

Figure 603 (Restricted System)

R-410A SEALED SYSTEM REPAIRS

Sealed System Method of Charging/ Repairs

⚠ WARNING	
	**BURN HAZARD** Proper safety procedures must be followed, and proper protective clothing must be worn when working with a torch. Failure to follow these procedures could result in moderate or serious injury.

⚠ CAUTION	
	**FREEZE HAZARD** Proper safety procedures must be followed, and proper protective clothing must be worn when working with liquid refrigerant. Failure to follow these procedures could result in minor to moderate injury.

The acceptable method for charging the sealed system is the Weighed in Charge Method. The weighed in charge method is applicable to all units. It is the preferred method to use, as it is the most accurate.

The weighed in method should always be used whenever a charge is removed from a unit such as for a leak repair, compressor replacement, or when there is no refrigerant charge left in the unit. To charge by this method, requires the following steps:

1. Install a piercing valve to remove refrigerant from the sealed system. (Piercing valve must be removed from the system before recharging.)
2. Recover Refrigerant in accordance with EPA regulations.
3. Install a process tube to sealed system.
4. Make necessary repairs to system.
5. Evacuate system to 200 microns or less.
6. Weigh in refrigerant with the property quantity of R-410A refrigerant.
7. Start unit, and verify performance.
8. Crimp the process tube and solder the end shut.

COMPONENT TESTING

Hermetic Components Check

⚠ WARNING

BURN HAZARD

Proper safety procedures must be followed, and proper protective clothing must be worn when working with a torch.

Failure to follow these procedures could result in moderate or serious injury.

⚠ WARNING

CUT/SEVER HAZARD

Be careful with the sharp edges and corners. Wear protective clothing and gloves, etc.

Failure to do so could result in serious injury.

Metering Device - Capillary Tube Systems

All units are equipped with capillary tube metering devices. Checking for restricted capillary tubes.

1. Connect pressure gauges to unit.
2. Start the unit in the cooling mode. If after a few minutes of operation the pressures are normal, the check valve and the cooling capillary are not restricted.
3. Switch the unit to the heating mode and observe the gauge readings after a few minutes running time. If the system pressure is lower than normal, the heating capillary is restricted.
4. If the operating pressures are lower than normal in both the heating and cooling mode, the cooling capillary is restricted.

Check Valve

A unique two-way check valve is used on the reverse cycle heat pumps. It is pressure operated and used to direct the flow of refrigerant through a single filter drier and to the proper capillary tube during either the heating or cooling cycle.

NOTE: The slide (check) inside the valve is made of teflon. Should it become necessary to replace the check valve, place a wet cloth around the valve to prevent overheating during the brazing operation.

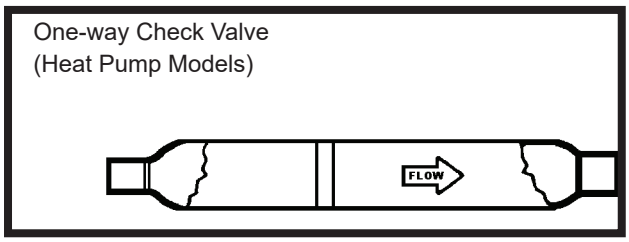

Figure 701 (Check Valve)

CHECK VALVE OPERATION

In the cooling mode of operation, high pressure liquid enters the check valve forcing the slide to close the opposite port (liquid line) to the indoor coil. Refer to refrigerant flow chart. This directs the refrigerant through the filter drier and cooling capillary tube to the indoor coil.

In the heating mode of operation, high pressure refrigerant enters the check valve from the opposite direction, closing the port (liquid line) to the outdoor coil. The flow path of the refrigerant is then through the filter drier and heating capillary to the outdoor coil.

Failure of the slide in the check valve to seat properly in either mode of operation will cause flooding of the cooling coil. This is due to the refrigerant bypassing the heating or cooling capillary tube and entering the liquid line.

COOLING MODE

In the cooling mode of operation, liquid refrigerant from condenser (liquid line) enters the cooling check valve forcing the heating check valve shut. The liquid refrigerant is directed into the liquid dryer after which the refrigerant is metered through cooling capillary tubes to evaporator. (Note: liquid refrigerant will also be directed through the heating capillary tubes in a continuous loop during the cooling mode).

HEATING MODE

In the heating mode of operation, liquid refrigerant from the indoor coil enters the heating check valve forcing the cooling check valve shut. The liquid refrigerant is directed into the liquid dryer after which the refrigerant is metered through the heating capillary tubes to outdoor coils. (Note: liquid refrigerant will also be directed through the cooling capillary tubes in a continuous loop during the heating mode).

COMPONENT TESTING

Reversing Valve Description And Operation

The Reversing Valve controls the direction of refrigerant flow to the indoor and outdoor coils. It consists of a pressure-operated, main valve and a pilot valve actuated by a solenoid plunger. The solenoid is energized during the heating cycle only. The reversing valves used in the RAC system is a 2-position, 4-way valve.

The single tube on one side of the main valve body is the high-pressure inlet to the valve from the compressor. The center tube on the opposite side is connected to the low pressure (suction) side of the system. The other two are connected to the indoor and outdoor coils. Small capillary tubes connect each end of the main valve cylinder to the "A" and "B" ports of the pilot valve. A third capillary is a common return line from these ports to the suction tube on the main valve body. Four-way reversing valves also have a capillary tube from the compressor discharge tube to the pilot valve.

The piston assembly in the main valve can only be shifted by the pressure differential between the high and low sides of the system. The pilot section of the valve opens and closes ports for the small capillary tubes to the main valve to cause it to shift.

NOTE: System operating pressures must be near normal before valve can shift.

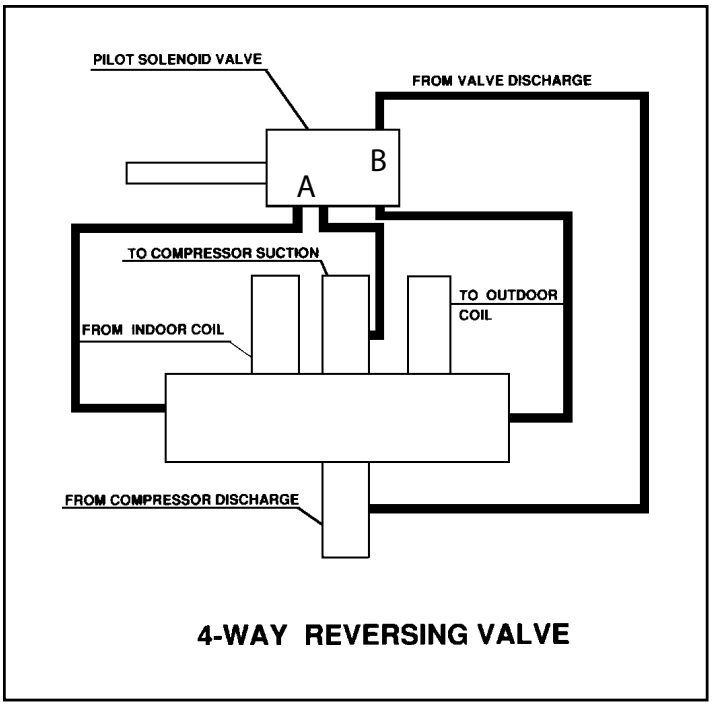

Figure 702 (Reversing Valve)

COMPONENT TESTING

Testing The Reversing Valve Solenoid Coil

⚠ WARNING

ELECTRIC SHOCK HAZARD

Disconnect power to the unit before servicing. Failure to follow this warning could result in serious injury or death.

The solenoid coil is an electromagnetic type coil mounted on the reversing valve and is energized during the operation of the compressor in the heating cycle.

1. Turn off high voltage electrical power to unit.
2. Unplug line voltage lead from reversing valve coil.
3. Check for electrical continuity through the coil. If you do not have continuity replace the coil.
4. Check from each lead of coil to the copper liquid line as it leaves the unit or the ground lug. There should be no continuity between either of the coil leads and ground; if there is, coil is grounded and must be replaced.
5. If coil tests okay, reconnect the electrical leads.
6. Make sure coil has been assembled correctly.

NOTE: Do not start unit with solenoid coil removed from valve, or do not remove coil after unit is in operation. This will cause the coil to burn out.

Touch Test in Heating/Cooling Cycle

⚠ WARNING

BURN HAZARD

Certain unit components operate at temperatures hot enough to cause burns.

Proper safety procedures must be followed, and proper protective clothing must be worn.

Failure to follow these procedures could result in minor to moderate injury.

The only definite indications that the slide is in the mid-position is if all three tubes on the suction side of the valve are hot after a few minutes of running time.

NOTE: If both tubes shown as hot or cool are not the same corresponding temperature, refer to figure 703, then the reversing valve is not shifting properly.

COMPONENT TESTING

Checking The Reversing Valve

⚠ WARNING

HIGH PRESSURE HAZARD

Sealed Refrigeration System contains refrigerant and oil under high pressure.

Proper safety procedures must be followed, and proper protective clothing must be worn when working with refrigerants.

Failure to follow these procedures could result in serious injury or death.

NOTE: You must have normal operating pressures before the reversing valve can shift.

Check the operation of the valve by starting the system and switching the operation from "Cooling" to "Heating" and then back to "Cooling". Do not hammer on valve.

Occasionally, the reversing valve may stick in the heating or cooling position or in the mid-position.
When sluggish or stuck in the mid-position, part of the discharge gas from the compressor is directed back to the suction side, resulting in excessively high suction pressure.

Should the valve fail to shift from coooling to heating, block the air flow through the outdoor coil and allow the discharge pressure to build in the system. Then switch the system from heating to cooling.

If the valve is stuck in the heating position, block the air flow through the indoor coil and allow discharge pressure to build in the system. Then switch the system from heating to cooling.

Should the valve fail to shift in either position after increasing the discharge pressure, replace the valve.

Dented or damaged valve body or capillary tubes can prevent the main slide in the valve body from shifting.
If you determing this is the problem, replace the reversing valve.

After all of the previous inspections and checks have been made and determined correct, then perform the "Touch Test" on the reversing valve.

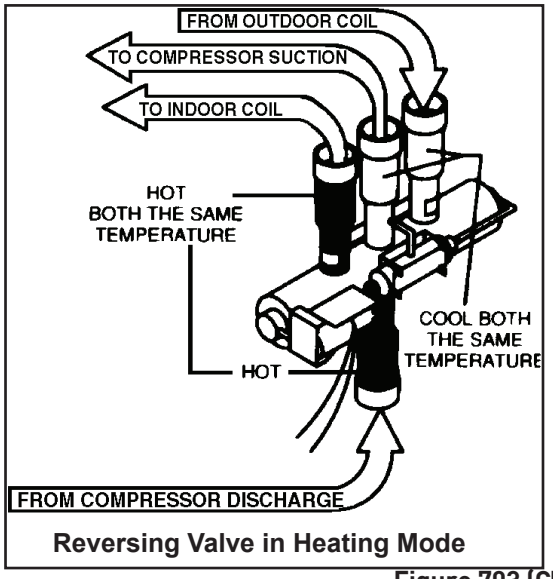

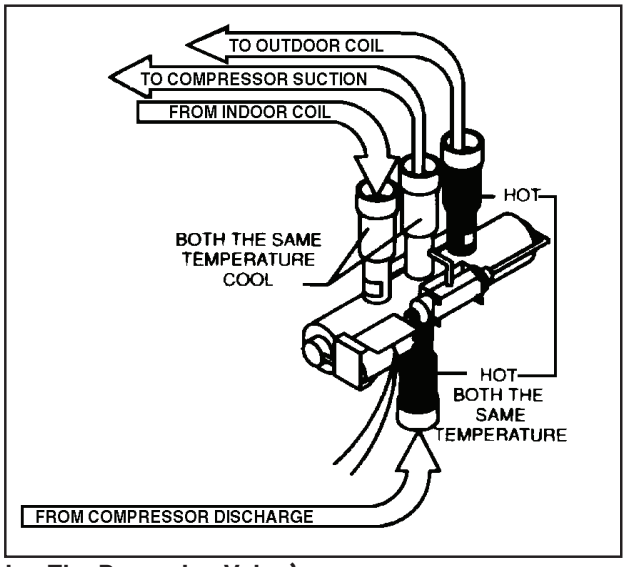

Figure 703 (Checking The Reversing Valve)

COMPONENT TESTING

Replace The Reversing Valve

⚠ WARNING

HIGH PRESSURE HAZARD

Sealed Refrigeration System contains refrigerant and oil under high pressure.

Proper safety procedures must be followed, and proper protective clothing must be worn when working with refrigerants.

Failure to follow these procedures could result in serious injury or death.

NOTICE

FIRE HAZARD

The use of a torch requires extreme care and proper judgment. Follow all safety recommended precautions and protect surrounding areas with fire proof materials. Have a fire extinguisher readily available. Failure to follow this notice could result in moderate to serious property damage.

1. Install Process Tubes. Recover refrigerant from sealed system. PROPER HANDLING OF RECOVERED REFRIGERANT ACCORDING TO EPA REGULATIONS IS REQUIRED.
2. Remove solenoid coil from reversing valve. If coil is to be reused, protect from heat while changing valve.
3. Unbraze all lines from reversing valve.
4. Clean all excess braze from all tubing so that they will slip into fittings on new valve.
5. Remove solenoid coil from new valve.
6. Protect new valve body from heat while brazing with plastic heat sink (Thermo Trap) or wrap valve body with wet rag.
7. Fit all lines into new valve and braze lines into new valve.

⚠ WARNING

EXPLOSION HAZARD

The use of nitrogen requires a pressure regulator. Follow all safety procedures and wear protective safety clothing etc.

Failure to follow proper safety procedures could result in serious injury or death.

8. Pressurize sealed system with a combination of R-410A and nitrogen and check for leaks, using a suitable leak detector. Recover refrigerant per EPA guidelines.
9. Once the sealed system is leak free, install solenoid coil on new valve and charge the sealed system by weighing in the proper amount and type of refrigerant as shown on rating plate. Crimp the process tubes and solder the ends shut. Do not leave Schrader or piercing valves in the sealed system.

NOTE: When brazing a reversing valve into the system, it is of extreme importance that the temperature of the valve does not exceed 250°F at any time.

Wrap the reversing valve with a large rag saturated with water. "Re-wet" the rag and thoroughly cool the valve after each brazing operation of the four joints involved.

The wet rag around the reversing valve will eliminate conduction of heat to the valve body when brazing the line connection.

COMPONENT TESTING

Touch Test Chart : To Service Reversing Valves

NORMAL FUNCTION OF VALVE								
VALVE OPERATING CONDITION	DISCHARGE TUBE from Compressor	SUCTION TUBE	COIL	Tube to OUTSIDE COIL	LEFT Pilot	RIGHT Pilot	NOTES: * TEMPERATURE OF VALVE BODY ** WARMER THAN VALVE BODY	
	1	2	3	4	5	6	POSSIBLE CAUSES	CORRECTIONS
Normal Cooling	Hot	Cool	Cool as (2)	Hot as (1)	*TVB	TVB		
Normal Heating	Hot	Cool	Hot as (1)	Cool as (2)	*TVB	TVB		
MALFUNCTION OF VALVE								
Valve will not shift from cool to heat.	Check Electrical circuit and coil						No voltage to coil.	Repair electrical circuit.
							Defective coil.	Replace coil.
	Check refrigeration charge						Low charge.	Repair leak, recharge system.
							Pressure differential too high.	Recheck system.
	Hot	Cool	Cool, as (2)	Hot, as (1)	*TVB	Hot	Pilot valve okay. Dirt in one bleeder hole.	Deenergize solenoid, raise head pressure, reenergize solenoid to break dirt loose. If unsuccessful, remove valve, wash out. Check on air before installing. If no movement, replace valve, add strainer to discharge tube, mount valve horizontally.
							Piston cup leak	Stop unit. After pressures equalize, restart with solenoid energized. If valve shifts, reattempt with compressor running. If still no shift, replace valve.
Valve will not shift from cool to heat.	Hot	Cool	Cool, as (2)	Hot, as (1)	*TVB	*TVB	Clogged pilot tubes.	Raise head pressure, operate solenoid to free. If still no shift, replace valve.
	Hot	Cool	Cool, as (2)	Hot, as (1)	Hot	Hot	Both ports of pilot open. (Back seat port did not close).	Raise head pressure, operate solenoid to free partially clogged port. If still no shift, replace valve.
	Warm	Cool	Cool, as (2)	Hot, as (1)	*TVB	Warm	Defective Compressor.	Replace compressor
Starts to shift but does not complete reversal.	Hot	Warm	Warm	Hot	*TVB	Hot	Not enough pressure differential at start of stroke or not enough fl ow to maintain pressure differential.	Check unit for correct operating pressures and charge. Raise head pressure. If no shift, use valve with smaller port.
							Body damage.	Replace valve
	Hot	Warm	Warm	Hot	Hot	Hot	Both ports of pilot open.	Raise head pressure, operate solenoid. If no shift, use valve with smaller ports.
	Hot	Hot	Hot	Hot	*TVB	Hot	Body damage.	Replace valve
							Valve hung up at mid-stroke. Pumping volume of compressor not suffi cient to maintain reversal.	Raise head pressure, operate solenoid. If no shift, use valve with smaller ports.
	Hot	Hot	Hot	Hot	Hot	Hot	Both ports of pilot open.	Raise head pressure, operate solenoid. If no shift, replace valve.
Apparent leap in heat-ing.	Hot	Cool	Hot, as (1)	Cool, as (2)	*TVB	*TVB	Piston needle on end of slide leaking.	Operate valve several times, then recheck. If excessive leak, replace valve.
	Hot	Cool	Hot, as (1)	Cool, as (2)	**WVB	**WVB	Pilot needle and piston needle leaking.	Operate valve several times, then recheck. If excessive leak, replace valve.
Will not shift from heat to cool.	Hot	Cool	Hot, as (1)	Cool, as (2)	*TVB	*TVB	Pressure differential too high.	Stop unit. Will reverse during equalization period. Recheck system
							Clogged pilot tube.	Raise head pressure, operate solenoid to free dirt. If still no shift, replace valve.
	Hot	Cool	Hot, as (1)	Cool, as (2)	Hot	*TVB	Dirt in bleeder hole.	Raise head pressure, operate solenoid. Remove valve and wash out. Check on air before reinstalling, if no movement, replace valve. Add strainer to discharge tube. Mount valve horizontally.
	Hot	Cool	Hot, as (1)	Cool, as (2)	Hot	*TVB	Piston cup leak.	Stop unit. After pressures equalize, restart with solenoid deenergized. If valve shifts, reattempt with compressor running. If it still will not reverse while running, replace the valve.
	Hot	Cool	Hot, as (1)	Cool, as (2)	Hot	Hot	Defective pilot.	Replace valve.
	Warm	Cool	Warm, as (1)	Cool, as (2)	Warm	*TVB	Defective compressor.	Replace compressor

Figure 704 (Touch Test Chart)

COMPONENT TESTING

Compressor Checks

⚠ WARNING

ELECTRIC SHOCK HAZARD

Turn off electric power before service or installation.

All electrical connections and wiring MUST be installed by a qualified electrician and conform to the National Electrical Code and all local codes which have jurisdiction.

Failure to do so can result in personal injury or death.

⚠ WARNING

BURN HAZARD

Proper safety procedures must be followed, and proper protective clothing must be worn when working with a torch.

Failure to follow these procedures could result in moderate or serious injury.

Locked Rotor Voltage (L.R.V.) Test
Locked rotor voltage (L.R.V.) is the actual voltage available at the compressor under a stalled condition.

Single Phase Connections
Disconnect power from unit. Using a voltmeter, attach one lead of the meter to the run "R" terminal on the compressor and the other lead to the common "C" terminal of the com-pressor. Restore power to unit.

Determine L.R.V.
Start the compressor with the volt meter attached; then stop the unit. Attempt to restart the compressor within a couple of seconds and immediately read the voltage on the meter. The compressor under these conditions will not start and will usually kick out on overload within a few seconds since the pressures in the system will not have had time to equalize. Voltage should be at or above minimum voltage of 197 VAC, as specified on the rating plate. If less than minimum, check for cause of inadequate power supply; i.e., incorrect wire size, loose electrical connections, etc.

Amperage (L.R.A.) Test
The running amperage of the compressor is the most important of these readings. A running amperage higher than that indicated in the performance data indicates that a problem exists mechanically or electrically.

Single Phase Running and L.R.A. Test
NOTE: Consult the specification and performance section for running amperage. The L.R.A. can also be found on the rating plate.
Select the proper amperage scale and clamp the meter probe around the wire to the "C" terminal of the compressor.
Turn on the unit and read the running amperage on the meter. If the compressor does not start, the reading will indicate the locked rotor amperage (L.R.A.).

Overloads
The compressor is equipped with either an external or internal overload which senses both motor amperage and winding temperature. High motor temperature or amperage heats the overload causing it to open, breaking the common circuit within the compressor. Heat generated within the compressor shell, usually due to recycling of the motor, is slow to dissipate. It may take anywhere from a few minutes to several hours for the overload to reset.

Checking the Overloads

External Overloads
With power off, remove the leads from compressor terminals. If the compressor is hot, allow the overload to cool before starting check. Using an ohmmeter, test continuity across the terminals of the external overload. If you do not have continuity; this indicates that the overload is open and must be replaced.

Interrnal Overloads
Some model compressors are equipped with an internal overload. The overload is embedded in the motor windings to sense the winding temperature and/or current draw. The overload is connected in series with the common motor terminal.
Should the internal temperature and/or current draw become excessive, the contacts in the overload will open, turning off the compressor. The overload will automatically reset, but may require several hours before the heat is dissipated.

Checking the Internal Overload
1. With no power to unit, remove the leads from the compressor terminals.
2. Using an ohmmeter, test continuity between terminals

C-S and C-R. If no continuity, the compressor overload is open and the compressor must be replaced.

COMPRESSOR CHECKS

⚠ WARNING

ELECTRIC SHOCK HAZARD
Turn off electric power before service or installation. Extreme care must be used, if it becomes necessary to work on equipment with power applied.

Failure to do so could result in serious injury or death.

⚠ WARNING

HIGH PRESSURE HAZARD
Sealed Refrigeration System contains refrigerant and oil under high pressure.

Proper safety procedures must be followed, and proper protective clothing must be worn when working with refrigerants.

Failure to follow these procedures could result in serious injury or death.

Single Phase Resistance Test
Remove the leads from the compressor terminals and set the ohmmeter on the lowest scale (R x 1).
Touch the leads of the ohmmeter from terminals common to start ("C" to "S"). Next, touch the leads of the ohmmeter from terminals common to run ("C" to "R").
Add values "C" to "S" and "C" to "R" together and check resistance from start to run terminals ("S" to "R"). Resistance "S" to "R" should equal the total of "C" to "S" and "C" to "R."
In a single phase PSC compressor motor, the highest value will be from the start to the run connections ("S" to "R"). The next highest resistance is from the start to the common connections ("S" to "C"). The lowest resistance is from the run to common. ("C" to "R") Before replacing a compressor, check to be sure it is defective.

GROUND TEST
Use an ohmmeter set on its highest scale. Touch one lead to the compressor body (clean point of contact as a good connection is a must) and the other probe in turn to each compressor terminal. If a reading is obtained the compressor is grounded and must be replaced.
Check the complete electrical system to the compressor and compressor internal electrical system, check to be certain that compressor is not out on internal overload.
Complete evaluation of the system must be made whenever you suspect the compressor is defective. If the compressor has been operating for sometime, a careful examination must be made to determine why the compressor failed.

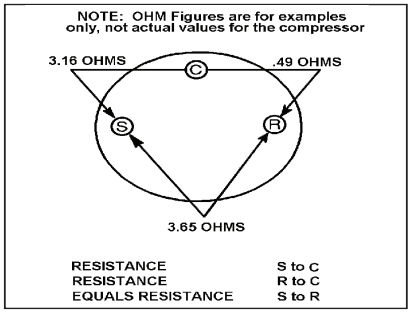

Figure 705 (Resistance Chart)

Many compressor failures are caused by the following conditions:
1.Improper air flow over the evaporator.
2.Overcharged refrigerant system causing liquid to be returned to the compressor.
3.Restricted refrigerant system.
4.Lack of lubrication.
5.Liquid refrigerant returning to compressor causing oil to be washed out of bearings.
6.Noncondensables such as air and moisture in the system. Moisture is extremely destructive to a refrigerant system.
7.Capacitor.

CHECKING COMPRESSOR EFFICIENCY
The reason for compressor inefficiency is normally due to broken or damaged suction and/or discharge valves, reducing the ability of the compressor to pump refrigerant gas.
This condition can be checked as follows:

1. Install a piercing valve on the suction and discharge or liquid process tube.
2. Attach gauges to the high and low sides of the system.-
3. Start the system and run a "cooling or heating perfor mance test." If test shows:
   A. Below normal high side pressure
   B. Above normal low side pressure
   C. Low temperature difference across coil

The compressor valves are faulty - replace the compressor.

COMPONENT TESTING

Compressor Replacement

⚠ WARNING

ELECTRIC SHOCK HAZARD
Turn off electric power before service or installation. Extreme care must be used, if it becomes necessary to work on equipment with power applied.

Failure to do so could result in serious injury or death.

⚠ WARNING

HIGH PRESSURE HAZARD
Sealed Refrigeration System contains refrigerant and oil under high pressure.

Proper safety procedures must be followed, and proper protective clothing must be worn when working with refrigerants.

Failure to follow these procedures could result in serious injury or death.

⚠ WARNING

EXPLOSION HAZARD
The use of nitrogen requires a pressure regulator. Follow all safety procedures and wear protective safety clothing etc.

Failure to follow proper safety procedures could result in serious injury or death.

⚠ CAUTION

FREEZE HAZARD
Proper safety procedures must be followed, and proper protective clothing must be worn when working with liquid refrigerant.

Failure to follow these procedures could result in minor to moderate injury.

1. Be certain to perform all necessary electrical and refrigeration tests to be sure the compressor is actually defective before replacing.

2. Recover all refrigerant from the system though the process tubes. **PROPER HANDLING OF RECOVERED REFRIGERANT ACCORDING TO EPA REGULATIONS IS REQUIRED**. Do not use gauge manifold for this purpose if there has been a burnout. You will contaminate your manifold and hoses. Use a Schrader valve adapter and copper tubing for burnout failures.

3.After all refrigerant has been recovered, disconnect suction and discharge lines from the compressor and remove compressor. Be certain to have both suction and discharge process tubes open to atmosphere.

4.Carefully pour a small amount of oil from the suction stub of the defective compressor into a clean container.

5.Using an acid test kit (one shot or conventional kit), test the oil for acid content according to the instructions with the kit.

6.If any evidence of a burnout is found, no matter how slight, the system will need to be cleaned up following proper procedures.

7.Install the replacement compressor.
8. Pressurize with a combination of R-410A and nitrogen and leak test all connections with a leak detector. Recover refrigerant and repair any leaks found.
8a. If leak detector is unavailable remove all refrigerant from system and pressurize with nitrogen to 550 psi. Check that system holds pressure.

Repeat Step 8 to insure no more leaks are present

9. Evacuate the system with a good vacuum pump capable of a final vacuum of 500 microns or less. The system should be evacuated through both liquid line and suction line gauge ports. While the unit is being evacuated, seal all openings on the defective compressor. Compressor manufacturers will void warranties on units received not properly sealed. Do not distort the manufacturers tube connections.

10. Recharge the system with the correct amount of refrigerant. The proper refrigerant charge will be found on the unit rating plate. The use of an accurate measuring device, such as a charging cylinder, electronic scales or similar device is necessary.

COMPONENT TESTING

Compressor Replacement -Special Procedure in Case of Compressor Burnout

1. Recover all refrigerant and oil from the system.
2. Remove compressor, capillary tube and filter drier from the system.
3. Flush evaporator condenser and all connecting tubing with dry nitrogen or equivalent. Use approved flushing agent to remove all contamination from system. Inspect suction and discharge line for carbon deposits. Remove and clean if necessary. Ensure all acid is neutralized.
4. Reassemble the system, including new drier strainer and capillary tube.

⚠ WARNING

HIGH PRESSURE HAZARD

Sealed Refrigeration System contains refrigerant and oil under high pressure.

Proper safety procedures must be followed, and proper protective clothing must be worn when working with refrigerants.

Failure to follow these procedures could result in serious injury or death.

5. Pressurize with a combination of R-410A and nitrogen and leak test all connections with a leak detector. Recover refrigerant and repair any leaks found.
5a. If leak detector is unavailable remove all refrigerant from system and pressurize with nitrogen to 550 psi. Check that system holds pressure.

Repeat Step 5 to insure no more leaks are present

6. Evacuate the system with a good vacuum pump capable of a final vacuum of 500 microns or less. The system should be evacuated through both liquid line and suction line gauge ports. While the unit is being evacuated, seal all openings on the defective compressor. Compressor manufacturers will void warranties on units received not properly sealed. Do not distort the manufacturers tube connections.

⚠ WARNING

ELECTRIC SHOCK HAZARD

Turn off electric power before service or installation. Extreme care must be used, if it becomes necessary to work on equipment with power applied.

Failure to do so could result in serious injury or death.

7. Recharge the system with the correct amount of refrigerant. The proper refrigerant charge will be found on the unit rating plate. The use of an accurate measuring device, such as a charging cylinder, electronic scales or similar device is necessary.

ROTARY AND SCROLL COMPRESSOR SPECIAL TROUBLESHOOTING AND SERVICE

Troubleshooting and servicing rotary compres-sors is basically the same as on the reciprocating compressor with only one main exception:

NEVER, under any circumstances, liquid charge a rotary-compressor through the **LOW** side. Doing so would cause permanent damage to the new compressor. Use a charging adapter.

⚠ WARNING

EXPLOSION HAZARD

The use of nitrogen requires a pressure regulator. Follow all safety procedures and wear protective safety clothing etc.

Failure to follow proper safety procedures could result in serious injury or death.

COMPONENTS TESTING

Fan Motor

A single phase permanent split capacitor motor is used to drive the evaporator blower and condenser fan. A self-resetting overload is located inside the motor to protect against high temperature and high amperage conditions. (See Figure 23)

⚠ WARNING

ELECTRIC SHOCK HAZARD
Turn off electric power before service or installation. Extreme care must be used, if it becomes necessary to work on equipment with power applied.

Failure to do so could result in serious injury or death.

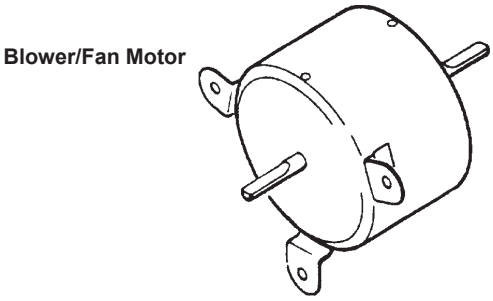

Figure 706 (Blower)

Blower / Fan Motor Test

1. Determine that capacitor is serviceable.
2. Disconnect fan motor wires from fan speed switch or system switch.
3. Apply "live" test cord probes on black wire and common terminal of capacitor. Motor should run at high speed.
4. Apply "live" test cord probes on red wire and common terminal of capacitor. Motor should run at low speed.
5. Apply "live" test cord probes on each of the remaining wires from the speed switch or system switch to test intermediate speeds. If the control is in the "MoneySaver" mode and the thermostat calls for cooling, the fan will start - then stop after approximately 2 minutes; then the fan and compressor will start together approximately 2 minutes later.

Capacitors

⚠ WARNING

ELECTRIC SHOCK HAZARD
Turn off electric power before service or installation. Extreme care must be used, if it becomes necessary to work on equipment with power applied.

Failure to do so could result in serious injury or death.

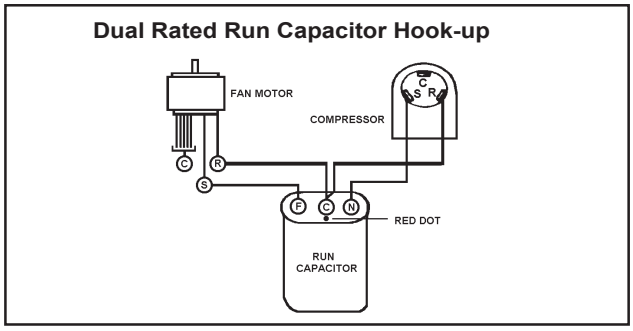

Figure 707 Dual Rated Capacitor Hook-Up

Many motor capacitors are internally fused. Shorting the terminals will blow the fuse, ruining the capacitor. A 20,000 ohm 2 watt resistor can be used to discharge capacitors safely. Remove wires from capacitor and place resistor across terminals. When checking a dual capacitor with a capacitor analyzer or ohmmeter, both sides must be tested.

Capacitor Check with Capacitor Analyzer

The capacitor analyzer will show whether the capacitor is "open" or "shorted." It will tell whether the capacitor is within its micro farads rating and it will show whether the capacitor is operating at the proper power-factor percentage. The instrument will automatically discharge the capacitor when the test switch is released.

Capacitor Connections

The starting winding of a motor can be damaged by a shorted and grounded running capacitor. This damage usually can be avoided by proper connection of the running capacitor terminals.
From the supply line on a typical 230 volt circuit, a 115 volt potential exists from the "R" terminal to ground through a possible short in the capacitor. However, from the "S" or start terminal, a much higher potential, possibly as high as 400 volts, exists because of the counter EMF generated in the start winding. Therefore, the possibility of capacitor failure is much greater when the identified terminal is connected to the "S" or start terminal. The identified terminal should always be connected to the supply line, or "R" terminal, never to the "S" terminal.
When connected properly, a shorted or grounded running capacitor will result in a direct short to ground from the "R" terminal and will blow the line fuse. The motor protector will protect the main winding from excessive temperature.

COMPONENTS TESTING

Heating Element

⚠ WARNING

ELECTRIC SHOCK HAZARD
Turn off electric power before service or installation. Extreme care must be used, if it becomes necessary to work on equipment with power applied.

Failure to do so could result in serious injury or death.

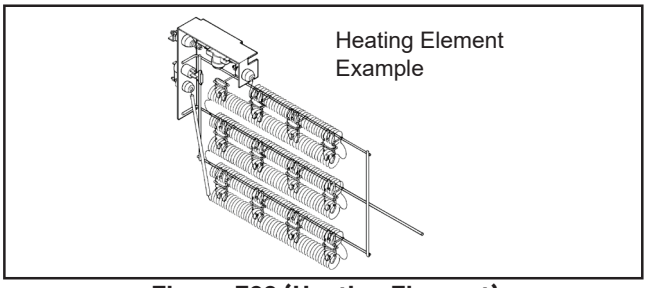

Figure 708 (Heating Element)

All heat pumps and electric heat models are equipped with a heating element . The models are equipped with a 3.4 KW element.
The heating element contains a fuse link and a heater limit switch. The fuse link is in series with the power supply and will open and interrupt the power when the temperature reaches 199°F or a short circuit occurs in the heating element. Once the fuse link separates, a new heater element must be installed.

NOTE: Always replace the heating element with the exact replacement.

The heater element has a high limit control. This control is a bimetal thermostat mounted in the top of the heating element. Should the fan motor fail or filter become clogged, the high limit control will open and interrupt power to the heater before reaching an unsafe temperature condition.
The control is designed to open at 110°F ±6°F. Test continuity below 110°F or when it is cooled off.

HEATING ELEMENT (Heat Pump Models)
The heating element for the "WHT12A33A" model is energized by an outdoor thermistor via the electronic control board. The outdoor defrost thermistor is adjusted at a predetermined temperature of approximately 30 degrees Fahrenheit and sensed for two consecutive minutes, to stop the compressor and turn on the heating element.

TESTING THE HEATING ELEMENT
Testing of the elements can be made with an ohmmeter across the terminals after the connecting wires have been removed. A cold resistance reading of approximately 14.5 ohms for the 3.4 KW heater should be registered.

Drain Pan Valve

During the cooling mode of operation, condensate which collects in the drain pan is picked up by the con-denser fan blade and sprayed onto the condenser coil. This assists in cooling the refrigerant plus evaporating the water.
During the heating mode of operation, it is necessary that water be removed to prevent it from freezing during cold outside temperatures. This could cause the con-denser fan blade to freeze in the accumulated water and prevent it from turning.
To provide a means of draining this water, a bellows type drain valve is installed over a drain opening in the base pan.
This valve is temperature sensitive and will open when the outside temperature reaches 40°F. The valve will close gradually as the temperature rises above 40°F to fully close at 60°F.

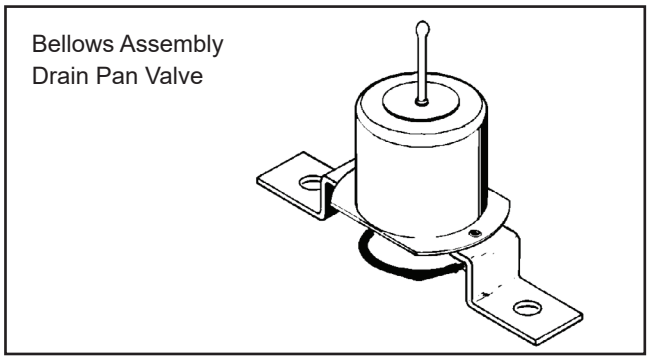

Figure 709 Drain Pan Valve

COMPONENTS TESTING

⚠ WARNING

ELECTRIC SHOCK HAZARD
Turn off electric power before service or installation. Extreme care must be used, if it becomes necessary to work on equipment with power applied.

Failure to do so could result in serious injury or death.

Testing the User Interface and Electronic Control Board

If the User Interface does not turn on:

1. Make sure the unit has the proper voltage and that it is turned on. Check power at Terminals L1 and L2. (refer to Electronic Control Board Identification, Figure 711)
2. Disconnect the User Interface's wire harness on the control board.
3. Using a voltmeter, check the outer pins on the user interface port of the elctronic control board . There should be 24VDC. (refer to Electronic Control Board Identification, Fig 711)
4. If there is no voltage, replace the electronic control board (refer to Fig 712).
5. If 24 VDC is present replace the User Interface and/ or the ribbon cable.

Thermistors Description

The Wallmaster units have 4 sensors (Thermistors). Each thermistor is color coded and has a differnt function.

1. Indoor Coil (Yellow) - located on the evaporator coil next to the power board
2. Outdoor Coil (Blue) - located on the condensor coil.
3. Discharge Air (Black) - located on the front of the unit in the discharge air port.
4. Ambient Air (White) - located o nt he front of the unit in front of the air intake

Thermistor Testing

1. Gain access to Electronic Control Board (Refer to Control Board Replacement, Fig 712)
2. Locate thermistor plug and disconnect from Control Board. (refer to Control Board Identification, Fig 711)
3. Check for proper resistance. (refer to Thermistor Resistance values, Fig 710)
4. If thermistor is out of tolerance, replace thermistor.

COMPONENTS TESTING

Thermistor Resistence Values (This Table Applies to All Thermistors)

TEMP	RESISTENCE (K Ohms)			RESISTANCE TOLERANCE %	
F	MIN	CENTR	MAX	MIN	MAX
-25	210.889	225.548	240.224	6.50	6.51
-20	178.952	190.889	202.825	6.25	6.25
-15	151.591	161.325	171.059	6.03	6.03
-10	128.434	136.363	144.292	5.81	5.81
-5	108.886	115.340	121.794	5.60	5.60
0	92.411	97.662	102.912	5.38	5.38
5	78.541	82.812	87.083	5.16	5.16
10	66.866	70.339	73.812	4.94	4.94
15	57.039	59.864	62.688	4.72	4.72
20	48.763	51.060	53.357	4.50	4.50
25	41.786	43.654	45.523	4.28	4.28
30	35.896	37.415	38.934	4.06	4.06
31	34.832	36.290	37.747	4.02	4.02
32	33.803	35.202	36.601	3.97	3.97
33	32.808	34.150	35.492	3.93	3.93
34	31.846	33.133	34.421	3.89	3.89
35	30.916	32.151	33.386	3.84	3.84
36	30.016	31.200	32.385	3.80	3.80
37	29.144	30.281	31.418	3.75	3.75
38	28.319	29.425	30.534	3.76	3.77
39	27.486	28.532	29.579	3.67	3.67
40	26.697	27.701	28.704	3.62	3.62
45	23.116	23.931	24.745	3.40	3.40
50	20.071	20.731	21.391	3.18	3.18
55	17.474	18.008	18.542	2.96	2.96
60	15.253	15.684	16.115	2.75	2.75
65	13.351	13.697	14.043	2.53	2.53
66	13.004	13.335	13.666	2.48	2.48
67	12.668	12.984	13.301	2.44	2.44
68	12.341	12.644	12.947	2.39	2.39
69	12.024	12.313	12.603	2.35	2.35
70	11.716	11.993	12.269	2.31	2.31
71	11.418	11.682	11.946	2.26	2.26
72	11.128	11.380	11.633	2.22	2.22
73	10.846	11.088	11.329	2.18	2.18
74	10.574	10.804	11.034	2.13	2.13
75	10.308	10.528	10.748	2.09	2.09
76	10.051	10.260	10.469	2.04	2.04
77	9.800	10.000	10.200	2.00	2.00
78	9.550	9.748	9.945	2.03	2.03
79	9.306	9.503	9.699	2.07	2.07
80	9.070	9.265	9.459	2.10	2.10
81	8.841	9.033	9.226	2.13	2.13
82	8.618	8.809	9.000	2.17	2.17
83	8.402	8.591	8.780	2.20	2.20
84	8.192	8.379	8.566	2.23	2.23
85	7.987	8.172	8.358	2.27	2.27
86	7.789	7.972	8.155	2.30	2.30
87	7.596	7.778	7.959	2.33	2.33
88	7.409	7.589	7.768	2.37	2.37
89	7.227	7.405	7.583	2.40	2.40
90	7.050	7.226	7.402	2.43	2.43
91	6.878	7.052	7.226	2.47	2.47
92	6.711	6.883	7.055	2.50	2.50
93	6.548	6.718	6.889	2.53	2.53
94	6.390	6.558	6.727	2.57	2.57
95	6.237	6.403	6.569	2.60	2.60
96	6.087	6.252	6.417	2.63	2.63
97	5.942	6.105	6.268	2.67	2.67
98	5.800	5.961	6.122	2.70	2.70
99	5.663	5.822	5.981	2.73	2.73
100	5.529	5.686	5.844	2.77	2.77
105	4.912	5.060	5.208	2.93	2.93
110	4.371	4.511	4.651	3.10	3.10
115	3.898	4.030	4.161	3.27	3.27
120	3.482	3.606	3.730	3.43	3.43

Figure 710 Thermistor Values

COMPONENTS TESTING

Electronic Control Board Identification

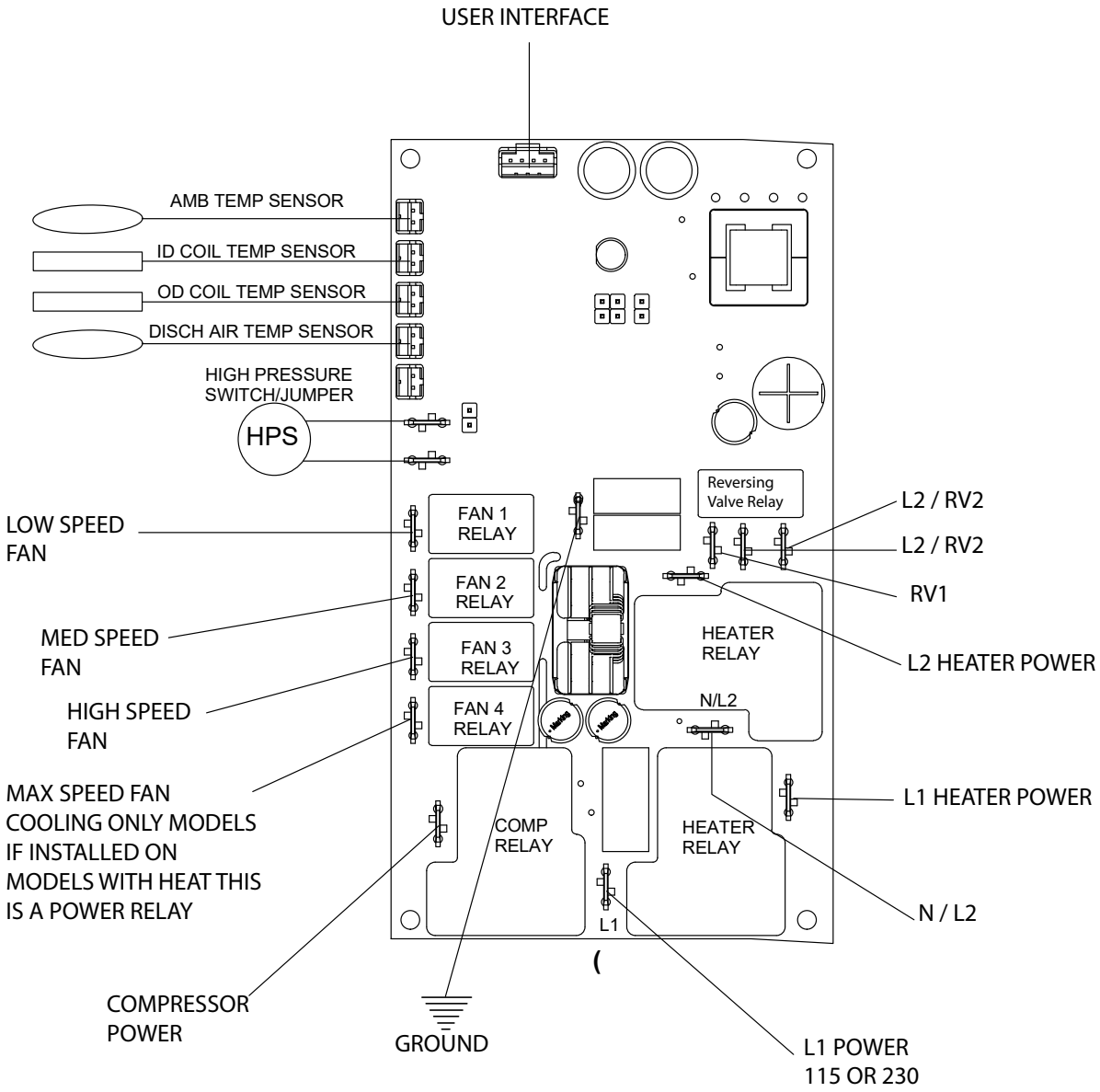

Figure 711 (Electronic Control Board Identification)

COMPONENT TESTING

Replace the Electronic Control Board

⚠ WARNING

ELECTRIC SHOCK HAZARD
Turn off electric power before service or installation. Extreme care must be used, if it becomes necessary to work on equipment with power applied.

Failure to do so could result in serious injury or death.

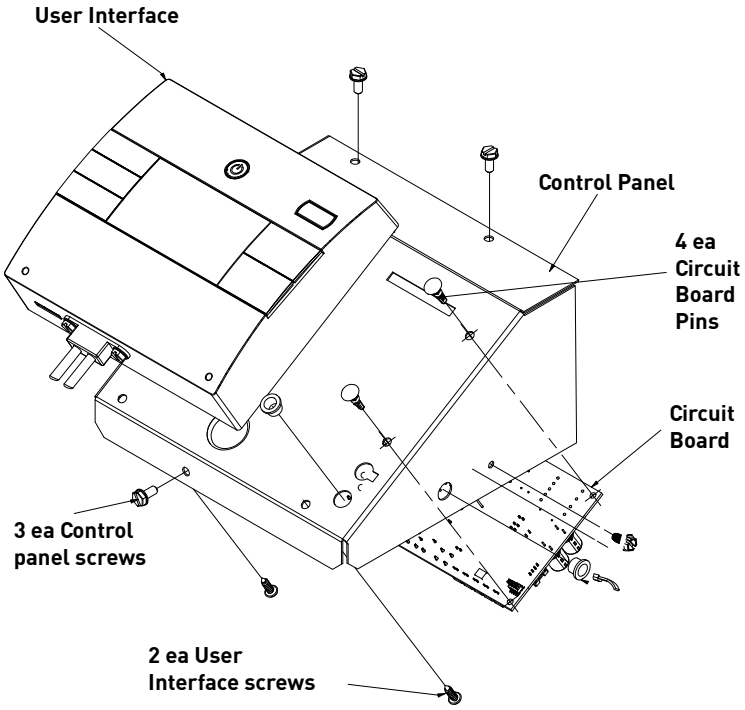

Figure 712
(Electronic Control Board and User Interface Replacement)

1. Unplug the unit
2. Remove the Front Cover. Refer to Routine Maintenance, Figure 401.
3. Slide the unit out approximately 3 inches from the sleeve.
4. Using a sharp knife, cut slits in the Chassis gasket seal where the control board panel will be opened to avoid damaging the gasket.
5. Remove two (2) screws from the top, and one (1) from the front of the control board panel and open panel.
5. Remove the four(4) circuit Board pins using needle nose pliers or other suitable tool.
6. Swap wires one for one from old control board to new control board. If swapping wires one for one is not possible, identify and tag wires. Refer to the wiring diagrams as required.
7. Install the control board using four(4) new circuit board pins.
8. Reinstall the control board panel, with three (3) screws reinstall the screw in the electronic holder, and secure wiring as required.
9. Install the Front Cover (refer to Routine Maintenance, Figure 401)
10. Plug in the unit and test the unit for proper operation. Refer to operation section.

Replace the User Interface

1.Unplug the Unit
2.Remove the Front Cover. Refer to Routine Maintenace, Figure 401.
3. Slide the unit out approximately 3 inches from the sleeve.
4. Using a sharp knife, cut slits in the Chassis gasket seal where the control board panel will be opened to avoid damaging the gasket.
5. Remove two (2) screws from the top, and one (1) from the front of the control board panel and open panel.
6. Remove two (2) mounting screws securing UI and disconnect ribbon cable.
7. Inspect ribbon cable for obvious signs of damage.
8. If ribbon cable is damaged, or damage is suspected, disconnect cable from User Interface and Control Board.
9. Paying careful attention to the ribbon cable routing, remove the old cable and replace with a new ribbon cable.
10. Connect ribbon cable to the power board and user interface as required.
11. Install new UI using the 2-screws.
12.Install the 3 Control Panel Screws.
13. Plug in the unit and verify control operation. Refer to Operation Section.

TROUBLESHOOTING

ROOM AIR CONDITIONER UNIT PERFORMANCE TEST DATA SHEET

JOB NAME_____ TECH'S NAME_____

DATE_____ MODEL#_____ SERIAL #_____

CHECK THE INSTALLATION	ACCEPTABLE YES	NOT ACCEPTABLE NO
IS A CHASIS GASKET INSTALLED?	_____	_____
IS THE FRESH / EXHAUST AIR VENT OPEN?	_____	_____
IS A FRIEDRICH SLEEVE INSTALLED?	_____	_____
IS A FRIEDRICH OUTDOOR GRILLE INSTALLED?	_____	_____
IS MAINTENANCE BEING PERFORMED?	_____	_____

ELECTRICAL

LINE VOLTAGE (STATIC)	_____ VOLTS
START UP VOLTAGE	_____ VOLTS
AMPERAGE DRAW (COOL)	_____ AMPS
AMPERAGE DRAW (HEAT)	_____ AMPS

COMPRESSOR

LOCKED ROTOR AMPS	_____ AMPS
RUNNING AMPERAGE DRAW	_____ AMPS

INDOOR CONDITIONS

INDOOR AMBIENT TEMPERATURE	_____ F
RELATIVE HUMIDITY (RH) INDOOR	_____%
DISCHARGE AIR TEMPERATURE (INDOOR)(COOL)	_____F
DISCHARGE AIR TEMPERATURE (INDOOR)(HEAT)	_____F
RETURN AIR TEMPERATURE (INDOOR)(COOL)	_____F
RETURN AIR TEMPERATURE (INDOOR) (HEAT)	_____F

OUTDOOR TEMPERATURE

OUTDOOR AMBIENT TEMPERATURE	_____F
RH OUTDOOR RELATIVE HUMIDITY	_____%
DISCHARGE AIR TEMPERATURE (OUTDOOR)(COOL)	_____F
DISCHARGE AIR TEMPERATURE (OUTDOOR)(HEAT)	_____F
INTAKE AIR TEMPERATURE (OUTDOOR)(COOL)	_____F
INTAKE AIR TEMPERATURE (OUTDOOR)(HEAT)	_____F

COOLING OR HEATING AREA

AREA W_____ * L_____ = FEET SQUARED

FOR A GENERAL GUIDE REFER TO SIZING GUIDE TO THE RIGHT

FOR EXACT LOAD CALCULATIONS CONSULT MANUAL J OR M.

Figure 713 (Test Data Sheet)

Cooling Sizing Guide

AREA TO BE CONDITIONED IN SQ. FT.	APPROXIMATE COOLING BTU REQUIRED
100 - 150	5000
150 - 250	6000
250 - 300	7000
300 - 350	8000
350 - 400	9000
400 - 450	10000
450 - 550	12000
550 - 700	14000
700 - 1000	18000
1000 - 1200	21000
1200 - 1400	23000
1400 - 1500	24000
1500 - 2000	30000
2000 - 2500	34000

Guide based on normal room insulation, average number of sun exposed windows and two person occupancy.

1. If heavily shaded, reduce cooling Btus required by 10%
2. If very sunny, increase cooling Btus required by 10%
3. Add 500 Btus per person over 2 people
4. Add 4,000 Btus if the area is a kitchen

Figure 714 (Cooling Sizing Guide)

TROUBLESHOOTING

Diagnostic Codes

DIAG CODE	PROBLEM	CONTROL BOARD'S ACTION
1	Front Panel Button Stuck For More Than 20 Seconds	Continue to monitor for "OPEN" (Unstuck) switch. Do not process switch input. ENSURE FRONT COVER DOES NOT DEPRESS BUTTONS
3	Indoor Temperature Sensor is Open or Shorted	Set temp to 75°F in COOLING or 68°F in HEATING. Unit continues to operate
4	Indoor Coil Temperature Sensor is Open or Shorted	Control Board sets temp to a default of 40°F. Override sensor. Unit continues to operate.
5	Outdoor Coil Temperature Sensor is Open or Shorted	Sets temp to 20°F. Override sensor. Continue operation. Use Elec Heat if available for HEATING. If not available use HEAT PUMP if outdoor temp allows.
6	Outdoor Coil greater than 175° F	Turn Compressor off. Wait for the outdoor coil to be less than 150°F for more than 2 consecutive minutes.
7	Indoor Coil less than 30° F for 2 consecutive minutes	Turn compressor and electric heat off. When coil temp reaches 45°F resume operation after lockout time.
8	Unit Cycles greater than 9 Times per hour	Continue operation. Continue to monitor. Take no action. Log Only.
9	Unit Cycles less than 3 Times per Hour	Continue operation. Continue to monitor. Take no action. Log Only.
12	Discharge Air greater than 185°F	Shutdown electric heater. Wait for the discharge air temperature to be less than 100°F. Resume operation.
14	Discharge Air Temperature Sensor is Open or Shorted	Override Sensor. Set temp to 75°F. Continue to monitor. Set error code 14 ON.
16	Temperature Beyond Operating Limits	Ambient temp is less than 0°F or greater than 130°F. Turn off compressor, electric heat, and fan. When cleared resume operation.
22	Outdoor Coil Temperature less than 30°F for 2 consecutive Minutes	Only applicable to units with heat pump and electric heat. Turn off heat pump operation. Use electric heat to satisfy all heating demands. Cleared when outdoor coil temp is greater than 45°F.
23	Frost Protection.	Only applicable to heat pump only units. Active when Heat Pump run time exceeds 60 minutes with the outdoor coil temp less than 26°F. Runs active defrost for up to 6 minutes.

Figure 715 (Diagnostic Codes)

TROUBLESHOOTING

Troubleshooting Tips

Problem	Possible Cause	Possible Solution
Unit does not operate.	The power button is off or the set point temperature is satisfied.	Push the power button on and raise or lower temperature setting (as appropriate) to call for operation.
	The LCDI power cord is unplugged.	Plug into a properly grounded 3 prong receptacle. (See Electrical Rating Tables, Figure 206) for the proper receptacle type for your unit.
	The LCDI power cord has tripped (Reset button has popped out).	Press and release RESET (Listen for click. Reset button latches and remains in.) to resume operation.
	The circuit breaker has tripped or the supply circuit fuse has blown.	Reset the circuit breaker, or replace the fuse as applicable. If the problem continues, contact a licensed electrician.
	There has been a local power failure.	The unit will resume normal operation once power has been restored.
Unit Trips Circuit Breaker or Blows Fuses.	Other appliances are being used on the same circuit. (115 Volt only)	The unit requires a dedicated outlet circuit, not shared with other appliances.
	An extension cord is being used.	Do NOT use an extension cord with this or any other air conditioner.
	The circuit breaker or time-delay fuse is not of the proper rating.	Replace with a circuit breaker or time-delay fuse of the proper rating. (See Electrical Rating Tables, Figure 206) for the proper circuit breaker/fuse rating for your unit. If the problem continues, contact a licensed electrician.
LCDI Power Cord Trips (Reset Button Pops Out).	The LCDI power cord can trip (Reset button pops out) due to disturbances on your power supply line.	Press and release RESET (Listen for click. Reset button latches and remains in.) to resume normal operation.
	Electrical overload, overheating, or cord pinching can trip (Reset button pops out) the LCDI power cord.	Once the problem has been determined and corrected, press and release RESET (Listen for click. Reset button latches and remains in.) to resume normal operation.
	NOTE: A damaged power supply cord must be replaced with a new power supply cord obtained from the product manufacturer and must not be repaired.	

Figure 716 (Troubleshooting Tips)

TROUBLESHOOTING

Tips continued

COMPLAINT	CAUSE	SOLUTION
Unit Does Not Cool/ Heat Room Sufficiently, or Cycles On And Off Too Frequently (continued).	Operating in Cooling mode while the outside temperature is below 60 °F (16 °C).	Do not try to operate your air conditioner in the cooling mode when the outside temperature is below 60 °F (16 °C). The unit will not cool properly, and the unit may be damaged.
	The digital control is set to fan cycling mode.	Since the fan does not circulate the room air continuously at this setting, the room air does not mix as well and hot (or cold) spots may result. Using the continuous fan setting is recommended to obtain optimum comfort levels.
	The air conditioner has insufficient cooling capacity to match the heat gain of the room.	Check the cooling capacity of your unit to ensure it is properly sized for the room in which it is installed. Room air conditioners are not designed to cool multiple rooms.
	The air conditioner has insufficient heating capacity to match the heat loss of the room.	Check the heating capacity of your unit. Air conditioners are sized to meet the cooling load, and heater size is then selected to meet the heating load. In extreme northern climates, room air conditioners may not be able to be used as a primary source of heat.
Unit Runs Too Much.	This may be due to an excessive heat load in the room.	If there are heat producing appliances in use in the room, or if the room is heavily occupied, the unit will need to run longer to remove the additional heat.
	It may also be due to an improperly sized unit.	Be sure to use exhaust vent fans while cooking or bathing and, if possible, try not to use heat producing appliances during the hottest part of the day.
Compressor does not run.	Low voltage	Check voltage at compressor. 115V & 230V units will operate at 10% voltage variance
	Temperature not set cold enough or room air thermistor inoperative	Set temperature to lower than ambient position. Test thermistor and replace if inoperative.
	Compressor hums but cuts off on overload	Direct test compressor.
	Open overload	Test overload protector & replace if inoperative
	Open capacitor	Test capacitor & replace if inoperative
	Inoperative power button	Test for continuity in all positions. Replace User Interface if switch inoperative.
	Broken, loose or incorrect wiring	Refer to appropriate wiring diagrams to check wiring. Correct as needed.

Figure 716 (Troubleshooting Tips)

TROUBLESHOOTING

Tips continued

COMPLAINT	CAUSE	SOLUTION
Fan motor does not run.	Inoperative system button	Test button & replace user interface if inoperative
	Broken, loose or incorrect wiring	Refer to applicable wiring diagram
	Open capacitor	Test capacitor & replace if inoperative
	Fan speed button defective	Replace user interface if inoperative
	Inoperative fan motor	Test fan motor & replace if inoperative (be sure internal overload has had time to reset)
Does not cool or only cools slightly	Undersized unit	Refer to industry standard sizing chart
	Indoor ambient thermistor open or shorted	See diagnostic codes and replace thermistor if needed.
	Dirty filter	Clean as recommended in Owner's Manual
	Dirty or restricted condenser or evaporator coil	Use pressure wash or biodegradable cleaning agent to clean
	Poor air circulation	Adjust discharge louvers. Use high fan speed
	Fresh air or exhaust air door open	Close doors. Instruct customer on use of this feature
	Low capacity - undercharge	Check for leak & make repair
	Compressor not pumping properly	Check amperage draw against nameplate. If not conclusive, make pressure test
Unit does not run	Fuse blown or circuit tripped	Replace fuse, reset breaker. If repeats, check fuse or breaker size. Check for shorts in unit wiring & components
	Loose or disconnected wiring control board or other components	Check wiring & connections. Reconnect per wiring diagram
Evaporator coil freezes up	Dirty filter	Clean filter (see Routine Maintenance)
	Restricted airfl ow	Check for dirty or obstructed coil. Clean coil (refer to routine Maintenance)
	Inoperative thermistor	Check Diagnostic Codes. Check Thermstors and replace as necessary.
	Short of refrigerant	De-ice coil & check for leak
	Inoperative fan motor	Test fan motor & replace if inoperative
	Partially restricted capillary tube	De-ice coil. Replace capillary tube
Compressor runs continually & does not cycle off	Excessive heat load	Unit undersized. Test cooling performance & replace with larger unit if needed. See sizing chart.
	Restriction in line	Check for partially iced coil & check temperature split across coil
	Thermistor shorted	Replace thermistor or electronic control board

Figure 716 (Troubleshooting Tips)

TROUBLESHOOTING

Tips continued

COMPLAINT	CAUSE	SOLUTION
Electronic control board does not turn unit off	Compressor relay contacts stuck	Replace electronic control board
	Incorrect wiring	Refer to appropriate wiring diagrams
	Unit undersized for area to be cooled	Refer to industry standard sizing chart
	Defective thermistor	Replace thermistor or electronic control board
Compressor runs for short periods only.	Incorrect wiring	Refer to appropriate wiring diagram
	Shorted or incorrect capacitor	Test capacitor and replace if needed.
	Restricted or low air flow through condenser coil or evaporator coil	Check for proper fan speed or blocked coils. Correct as needed.
	Compressor running abnormally hot	Check for kinked discharge line or restricted condenser. Refrigerant overcharge. Check amperage, connections.
Unit does not turn on	No power	Check power supply. Check LCDI plug. Check wire connections. Check if panel is locked.
	Incorrect wiring	Refer to appropriate wiring diagram
	Defective thermistor	Replace thermistor or electronic control board
Noisy operation	Poorly installed	Refer to Installation Manual for proper installation
	Fan blade striking chassis	Reposition - adjust motor mount
	Compressor vibrating	Check that compressor grommets have not deteriorated. Check that compressor mounting parts are not missing
	Improperly mounted or loose cabinet parts refrigerant tubes	Check assembly & parts for looseness, rubbing & rattling pipes, etc.
Water Leaks into Room	Evaporator drain pan overflowing	Clean obstructed drain trough
	Condensation forming underneath base pan	Evaporator drain pan broken or cracked. Reseal or replace. No chassis gasket installed. Install chassis gasket
	Poor installation resulting in rain entering the room	Check installation instructions. Reseal as required
	Condensation on discharge grille louvers	Dirty evaporator coil. Clean coils (See Routine Maintenance) Environmental phenomena: point supply louvers upward. Put on high fan.
	Chassis gasket not installed	Install gasket, per Installation manual
	Downward slope of unit is too steep inward	Refer to installation manual for proper installation

Figure 716 (Troubleshooting Tips)

TROUBLESHOOTING

Tips continued

COMPLAINT	CAUSE	SOLUTION
Water “spitting” into room	Sublimation: When unconditioned saturated, outside air mixes with conditioned air, condensation forms on the cooler surfaces	Ensure that foam gaskets are installed in between window panes & in between the unit & the sleeve. Also, ensure that fresh air/exhaust vents (on applicable models) are in the closed position & are in tact
	Downward pitch of installation is too steep towards back of unit	Follow installation instructions to ensure that downward pitch of installed unit is no less than 1/4” & no more than 3/8”
	Restricted coil or dirty fi lter	Clean & advise customer of periodic cleaning & maintenance needs of entire unit
Excessive moisture	Insufficient air circulation thru area to be air conditioned	Adjust louvers for best possible air circulation
	Inadequate vapor barrier in building structure, particularly fl oors	Advise customer
Unit short cycles	Defective thermistor	Replace thermistor or electronic control board
	Unit oversized	See sizing chart. Correct as needed.
	Chassis seal gasket not sealing or absent causting unit to short cycle	Check gasket. Reposition or replace as needed
	Restricted coil or dirty fi lter	Clean & advise customer of periodic cleaning & maintenance needs of entire unit
Prolonged off cycles	Defective indoor ambient thermistor or electronic control board	Check alarms. Replace thermistor or electronic control board
Outside water leaks	Evaporator drain pan cracked or obstructed	Repair, clean or replace as required
	Obstructed condenser coil	Use pressure wash or biodegradable cleaning agent to clean
	Fan blade/slinger ring improperly positioned	Adjust fan blade to 1/2” of condenser coil fi n pack

Figure 716 (Troubleshooting Tips)

TROUBLESHOOTING

Cool with Heat Units

COMPLAINT	CAUSE	SOLUTION
Room temperature uneven (Heating cycle)	Bad indoor ambient thermistor	Check diagnostic codes. Check Thermistors. Replace as needed.
	Fan speed too low	Set at higher fan speed.
Does not heat adequately	Exhaust or fresh air door open	Check if operating properly. Instruct customer on proper use of control
	Dirty filter	Clean (See Routine Maintenance)
	Unit undersized	Check heat rise across coil. If unit operates effi ciently, check if insulation can be added to attic or walls. If insulation is adequate, recommend additional unit or larger one
	Heater hi-limit control cycling on & off	Check for adequate fan air across heater. Check for open hi-limit control.
	Shorted or open supplementary heater	Do ohmmeter check.
	Incorrect wiring	Check applicable wiring diagram
Unit cools when heat is called for	Incorrect wiring	Refer to applicable wiring diagram
	Defective solenoid coil	Check for continuity of coil
	Reversing valve fails to shift	Block condenser coil & switch unit to cool-ing. Allow pressure to build up in system, then switch to heating. If valve fails to shift, replace valve.
Cooling adequate, but heating insufficient	Reversing valve failing to shift com-pletely; bypassing hot gas	Denergize solenoid coil, raise head pressure, energize solenoid to break loose. If valve fails to make complete shift, replace valve.

Figure 716 (Troubleshooting Tips)

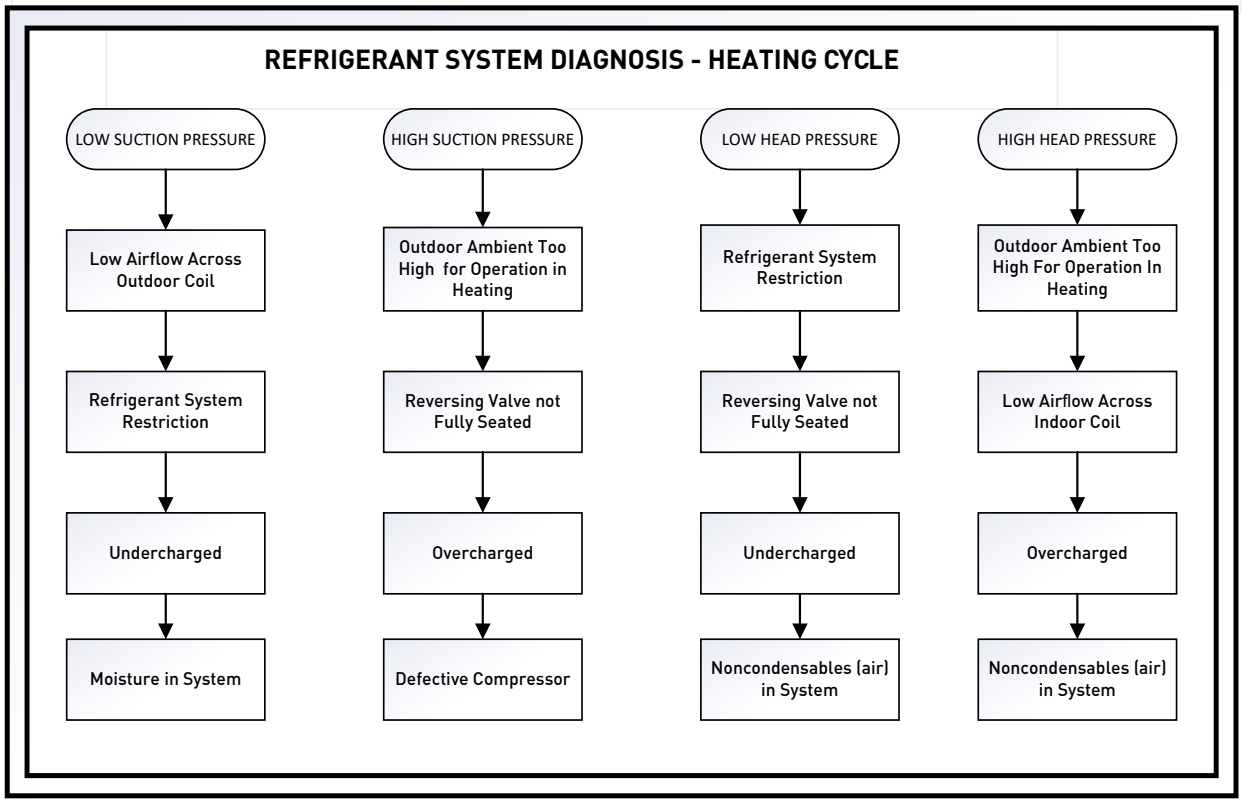

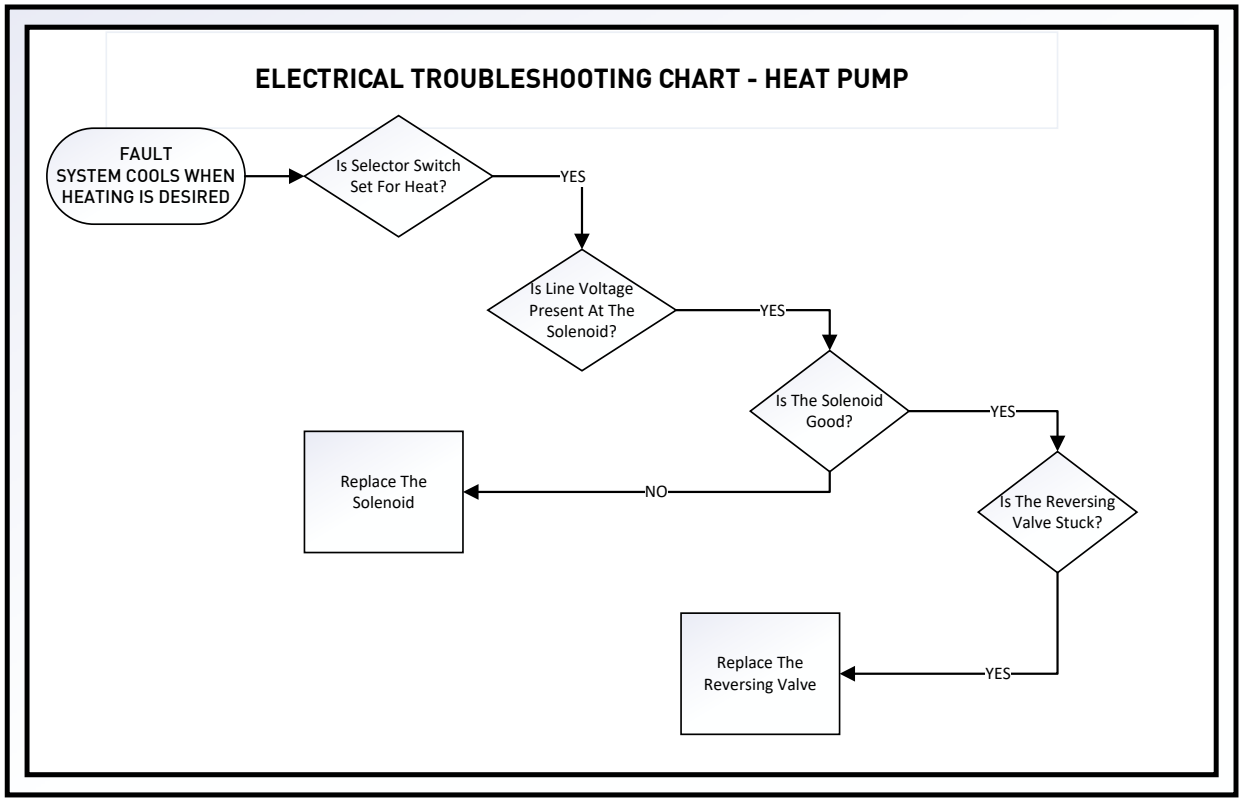

Figure 717 (Trouble Shooting Tips)

AIR CONDITIONERS: TROUBLE SHOOTING TIPS

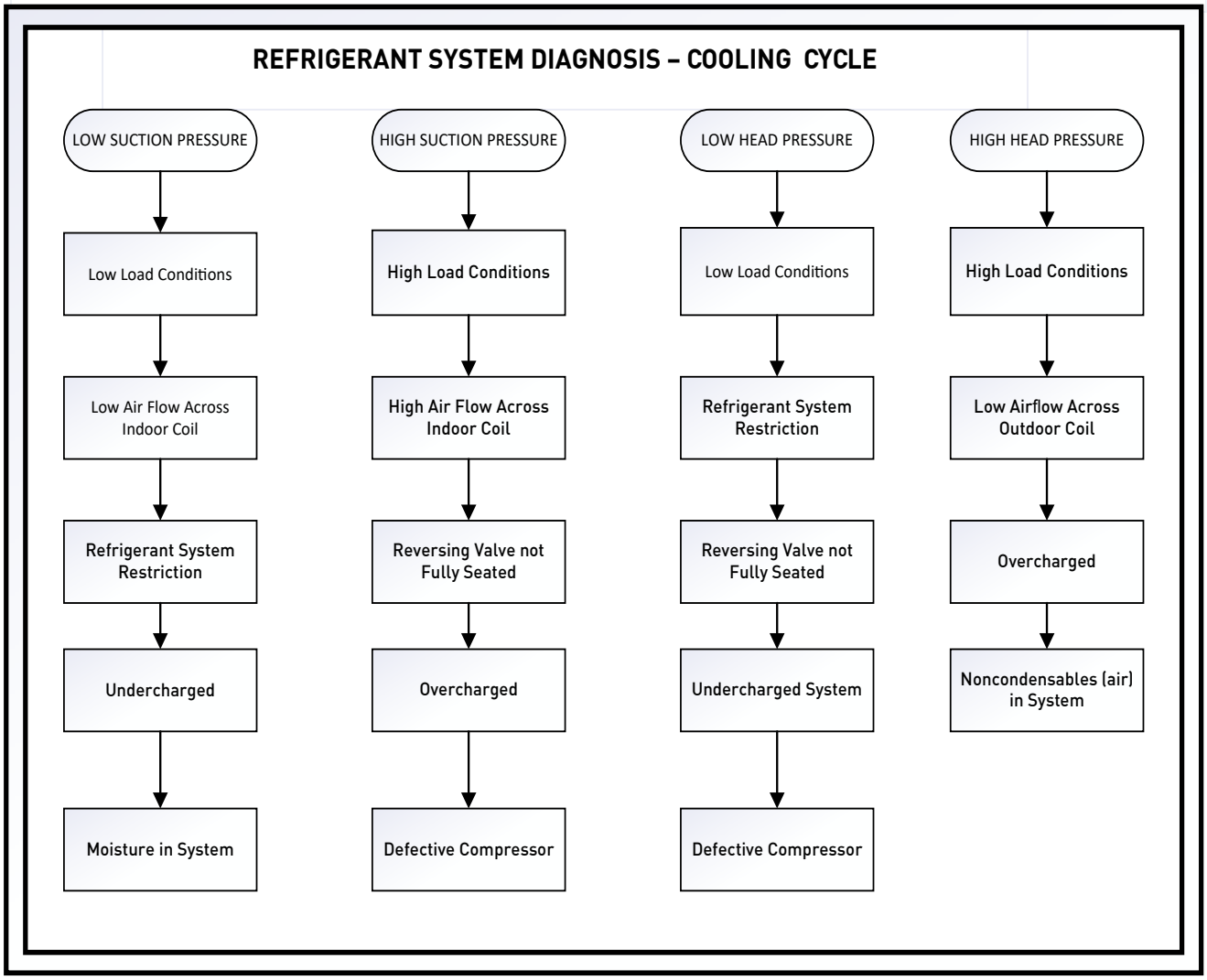

Figure 718 (Trouble Shooting Tips)

WIRING DIAGRAMS

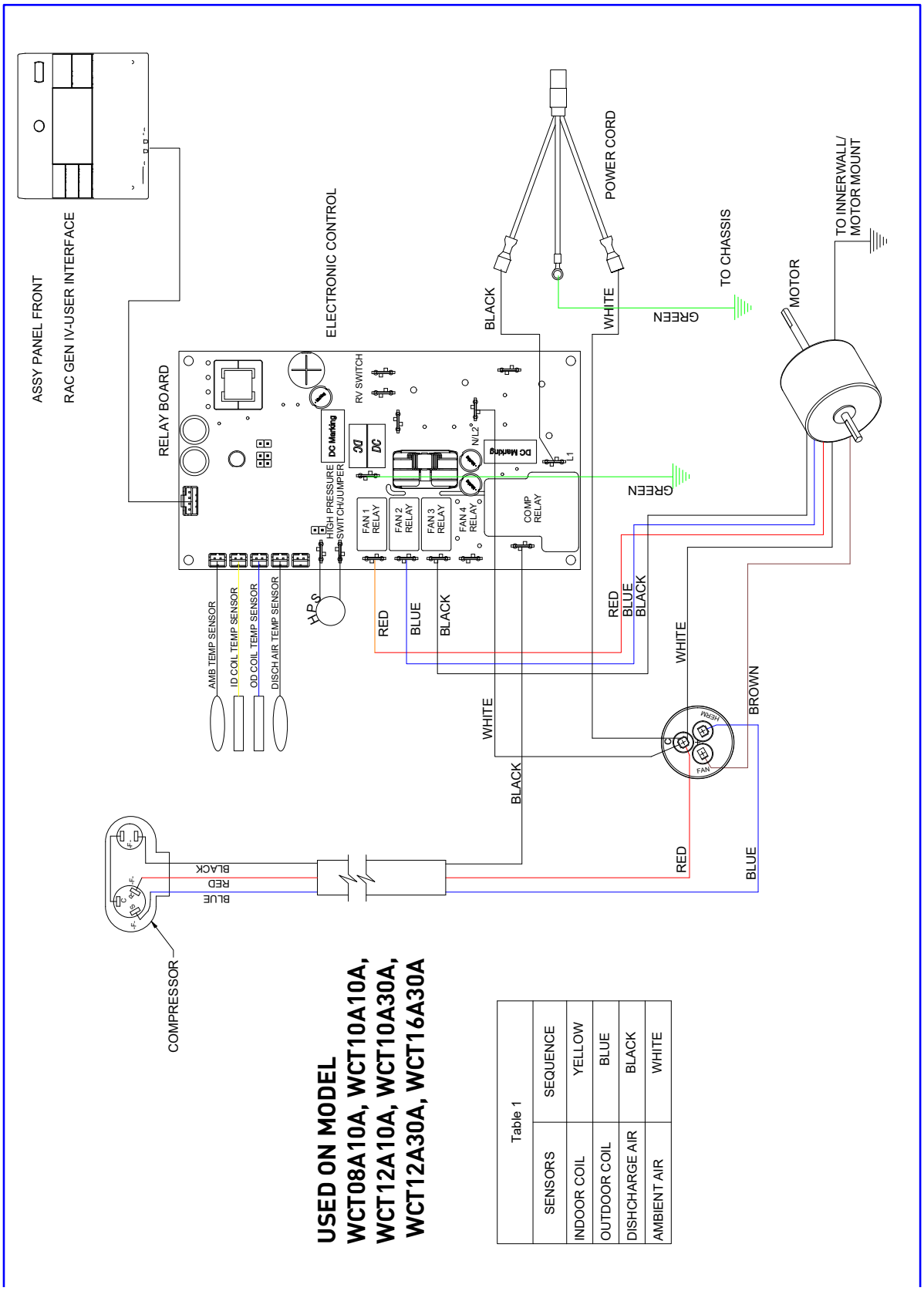

USED ON MODEL
WCT08A10A, WCT10A10A, WCT12A10A, WCT10A30A, WCT12A30A, WCT16A30A

Table 1

SENSORS	SEQUENCE
INDOOR COIL	YELLOW
OUTDOOR COIL	BLUE
DISHCHARGE AIR	BLACK
AMBIENT AIR	WHITE

Figure 801 (Wiring Diagrams)

WIRING DIAGRAMS

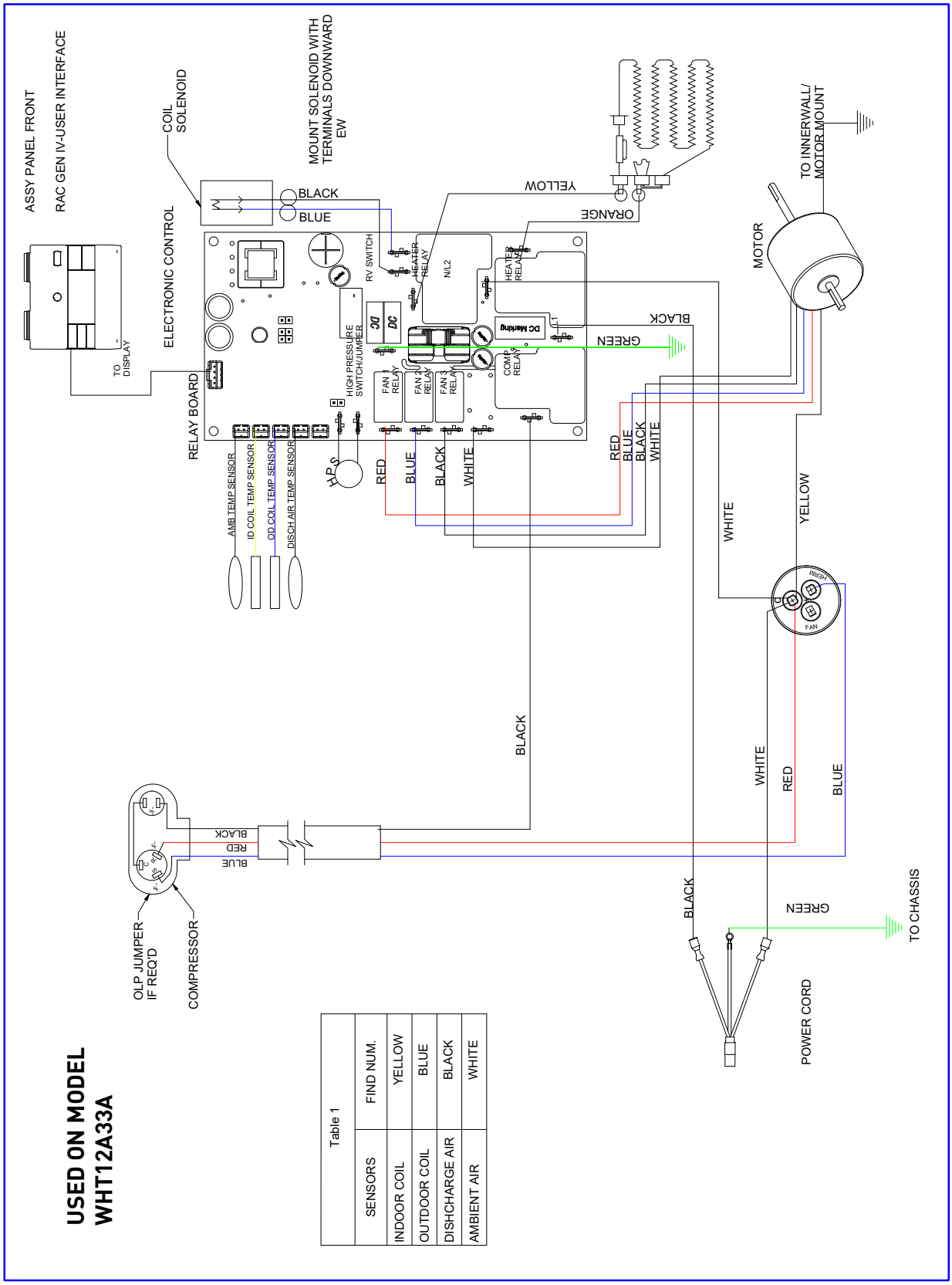

Figure 802 (Wiring Diagrams)

WIRING DIAGRAMS

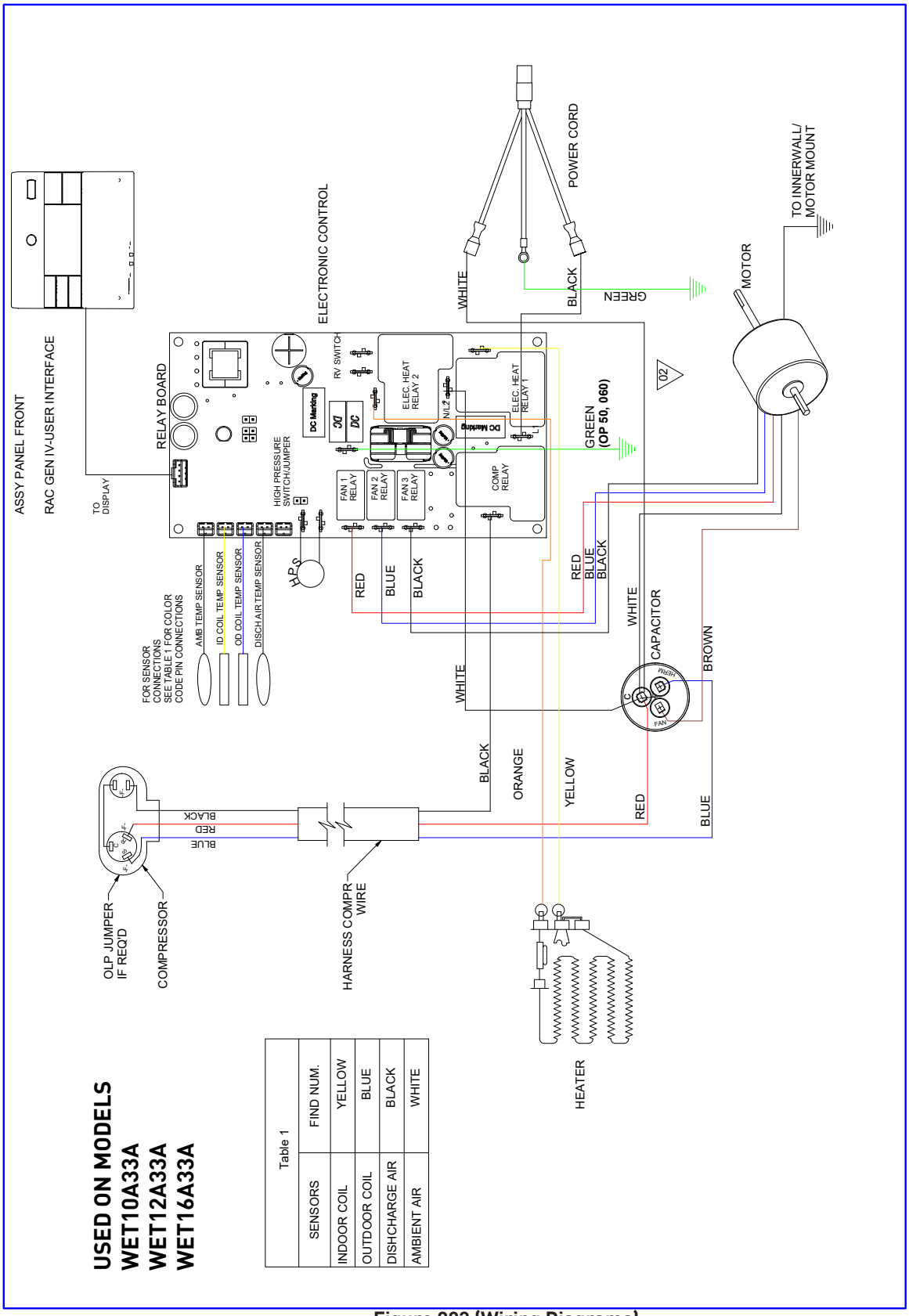

Figure 803 (Wiring Diagrams)

PARTS CATALOG

Introduction

This illustrated part catalog has been written to help assist the technician to quickly locate the parts that he or she needs to make a repair.

The catalog is broken down into different figures which represent different modules of the air conditioning unit. For example; the chassis, refrigeration system, blower system, or electrical controls. Each figure contains an illustration(s) containing item numbers and a corresponding item list.

The item list contains the item number, part number, part description, the model it is used on, and the quantity used per figure. The models will end with a letter indicating the major revision of the model. for example; WCT12A30**A**. Choose the part that corresponds with the USED ON MODEL annotation that corresponds to your nameplate.

In some cases there will be an additional "-" letter indicating there has been a minor revision to that model which may have caused a part number change. For example; WCT12A30**A-B**. If there are minor revisions listed for a part, and the minor revision that is listed on your equipment's nameplate is not listed in the manual, please check our online parts viewer for the latest update. If you still require asistance, call Friedrich customer service**(1-800-541-6645)** for an explanation.

Items with a **-** in front of the item number (for example -10), are non illustrated items.

Items with an ***** in front of the number (for example *10) are non-stocked items. If you require these items contact Friedrich customer service at **(1-800-541-6645)** to check for availability and lead time.

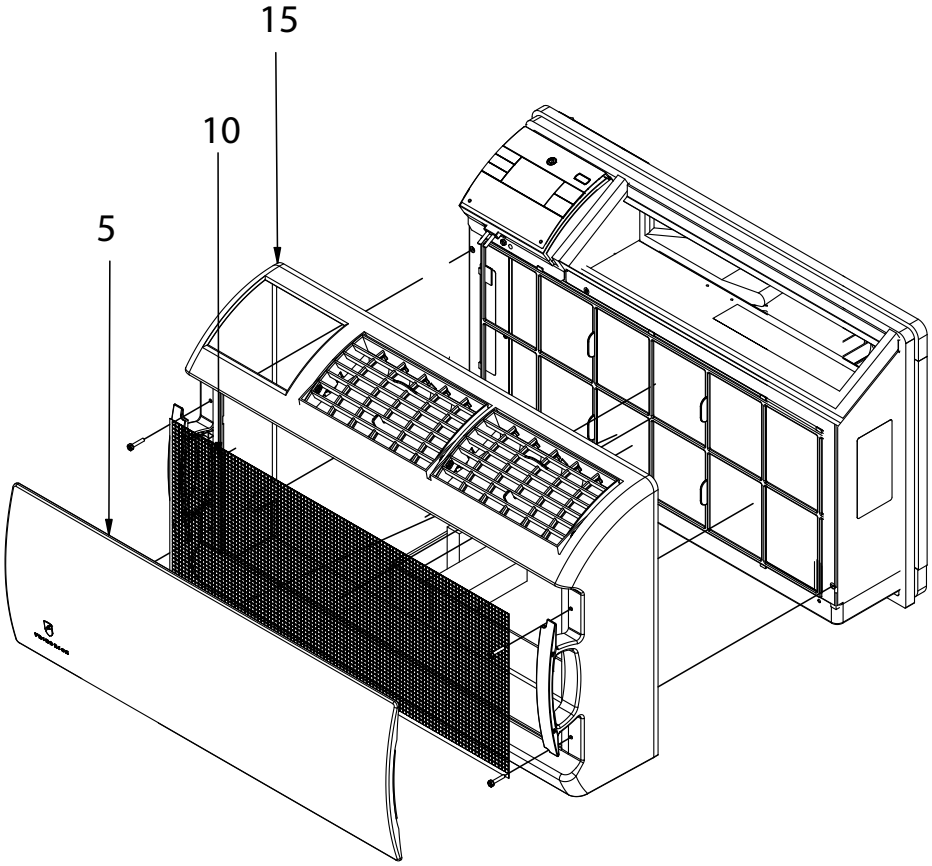

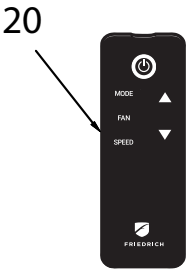

FIgure 901 (Exterior Parts)

FIGURE 901

ITEM	PART NUMBER	PART DESCRIPTION	USED ON MODEL	QTY
5	61612706	INTAKE GRILLE WM	ALL	1
10	60865812	FILTER AIR W/M	ALL	1
15	61607012	ASSY DECO FRONT W/ SEAL GASKET (WMT) 2019	ALL	1
20	62602100	RAC GEN IV - REMOTE CONTROL UNIT- - XYX-0601	ALL	1
-25	61717306	GASKET CHASSIS SEAL LONG	ALL	2
-30	61717307	GASKET CHASSIS SEAL	ALL	2
-35	62106500	DRAIN TUBE	ALL	1
-40	62400903	ASSY KIT DECO FRONT WMT 2019	ALL	1

-ITEMS ARE NON- ILLUSTRATED
*ITEMS ARE NON-STOCKED, WILL NORMALLY REQUIRE 2-3 WEEKS LEAD TIME

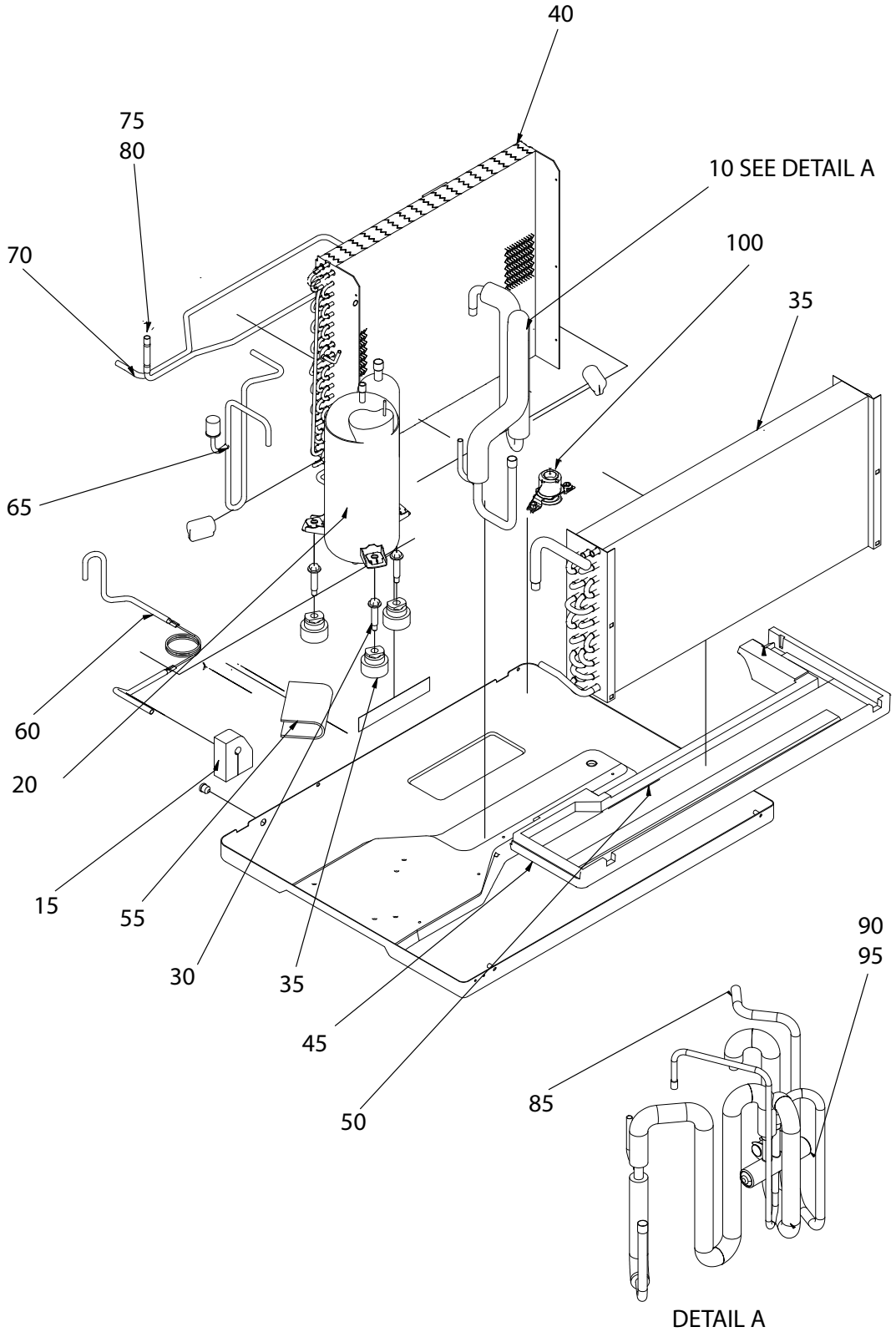

FIgure 902 (Refrigeration)

ITEM	PART NUMBER	PART DESCRIPTION	USED ON MODEL	QTY
5	61606219	BASEPAN ASSY	WHT12A33A	1
5	61606217	BASEPAN ASSY	WET10A33A, WET12A33A	1
5	61606220	BASEPAN ASSY	WET16A33A	1
5	62100914	BASEPAN ASSY	WCT08A10A, WCT10A10A, WCT12A10A, WCT12A10B, WCT10A30A, WCT12A30A, WCT12A30B	1
5	62100916	BASEPAN ASSY	WCT16A30A	1
*10	62104937	SUCTION TUBE ASSY	WET16A33A, WCT16A30A	1
*10	62104939	SUCTION TUBE ASSY	WCT12A30A, WET12A33A, WET16A33A	1
*10	62104636	SUCTION TUBE ASSY	WCT12A30B	1
*10	62104454	ASSY TUBE SUCTION	WCT10A30A	1
*10	62104454	SUCTION TUBE ASSY	WET10A33A	1
*10	62104941	SUCTION TUBE ASSY	WCT12A10A	1
*10	62104938	SUCTION TUBE ASSY	WCT08A10A, WCT10A10A	1
*10	62104639	SUCTION TUBE ASSY	WCT12A10B	1
*15	62101000	GROMMET, SUCT TUBE	ALL	1
20	61717184	COMPRESSOR REPLACEMENT KIT COMPR PN 62200147	WHT12A33A, WET12A33A, WCT12A30A	1
20	61717185	COMPRESSOR REPLACEMENT KIT COMPR PN 62200148	WET10A33A, WCT10A30A	1
20	61717186	COMPRESSOR REPLACEMENT KIT COMPR PN 62200149	WCT12A10A	1
20	61717192	COMPRESSOR REPLACEMENT KIT COMPR PN 62200150	WCT12A10B	1
20	61717193	COMPRESSOR REPLACEMENT KIT COMPR PN 62200151	WCT12A30B	1
20	61718135	COMPRESSOR REPLACEMENT KIT COMPR PN 62200142	WCT08A10A, WCT10A10A	1
20	61717181	COMPRESSOR REPLACEMENT KIT COMPR PN 62200143	WET16A33A, WCT16A30A	1
20	61718126	COMPRESSOR REPLACEMENT KIT COMPR PN 62200315	WCT08A10A	1
25	61028904	GROMMET COMP LOW DENSITY	ALL	3
30	91400402	STUD COMP MTG	ALL	3
35	61896216	EVAPORATOR COIL ASSY WES.312X4X16RC2V45A23X11H6	WHT12A33A, WET12A33A, WET16A33A, WCT12A10A, WCT12A10B, WCT12A30A, WCT12A30B	1
35	62103318	EVAPORATOR COIL ASSY WES.375X3X16RC2V45A23X11H6	WET10A33A, WCT08A10A	1
35	61896032	EVAPORATOR COIL ASSY	WCT08A10A-A, WCT08A10A-B, WCT08A10A-C	1

ITEM	PART NUMBER	PART DESCRIPTION	USED ON MODEL	QTY
35	61896042	EVAPORATOR COIL ASSY USED ON WCT08A10-D AND LATER	WCT08A10A-D	1
35	62103319	EVAPORATOR COIL ASSY WES.312X4X16RC2E45A23X11H6	WET16A33A, WCT16A30A	1
35	62103318	EVAPORATOR COIL ASSY WES.375X3X16RC2V45A23X11H6	WCT10A10A, WCT10A30A	1
40	61850266	CONDENSOR COIL ASSY WCS.250X5X16XC9K45A17X15H3	WET16A33A, WCT16A30A	1
40	61850207	CONDENSOR COIL ASSY WCS5MMX5X18XC9X39A17H0	WET12A33A, WET16A33A, WCT12A10A-A, WCT12A10A-C WCT12A30A, WCT16A30A-D, WET16A33A-D, WCT12A10B, WCT12A30B	1
40	61896312	CONDENSOR COIL ASSY	WCT12A10A-D, WCT12A30A-D, WET12A33A-D	1
40	61850208	CONDENSOR COIL ASSY WCS5MMX3X16RC9X39A17H2	WET10A33A, WCT08A10A, WCT10A10A, WCT10A30A	1
40	61896041	CONDENSOR COIL ASSY	WCT08A10A-A, WCT0810A-B, WCT08A10A-C	1
40	61896318	CONDENSOR COIL ASSY	WCT08A10A-D	1
40	61896215	CONDENSOR COIL ASSY WCS.312X4X16RC2V45A17X15H6	WHT12A33A	1
45	62101901	DRAINPAN ASSY	ALL	1
50	62106200	DRAINPAN HEAT SHIELD	ALL	1
55	61883102	PAD ISOLATION 3X6	ALL	1
60	67000210	CHECK VALVE AND CAP TUBE ASSY KIT (INCLUDES CHECK VALVE AND CAP TUBE ASSY (PN 6216807), 2 STRAINERS, AND 2 STRAINER HOLDERS	WHT12A33A	1
60	67000211	CAP TUBE ASSY KIT (INCLUDES CAP TUBE ASSY (PN 62104624), STRAINER, AND STRAINER HOLDER	WET16A33A, WCT16A30A	1
60	67000212	CAP TUBE ASSY KIT (INCLUDES CAP TUBE ASSY (PN 62104445), STRAINER, AND STRAINER HOLDER	WET12A33A, WCT12A30A	1
60	67000213	CAP TUBE ASSY KIT (INCLUDES CAP TUBE ASSY (PN 62104449), STRAINER, AND STRAINER HOLDER	WET10A33A, WCT10A30A	1
60	67000214	CAP TUBE ASSY KIT (INCLUDES CAP TUBE ASSY (PN 62104435), STRAINER, AND STRAINER HOLDER	WCT12A10A-A, WCT12A10A-C	1
60	TBD	CAP TUBE ASSY KIT (INCLUDES CAP TUBE ASSY (PN 62104480), STRAINER, AND STRAINER HOLDER	WCT12A10A-D	1

FIGURE 902

ITEM	PART NUMBER	PART DESCRIPTION	USED ON MODEL	QTY
60	TBD	CAP TUBE ASSY KIT (INCLUDES CAP TUBE ASSY (PN 62104640), STRAINER, AND STRAINER HOLDER	WCT12A10B	1
60	TBD	CAP TUBE ASSY KIT (INCLUDES CAP TUBE ASSY (PN 62104645), STRAINER, AND STRAINER HOLDER	WCT12A30B	1
60	67000215	CAP TUBE ASSY KIT (INCLUDES CAP TUBE ASSY (PN 62104444), STRAINER, AND STRAINER HOLDER	WCT08A10A, WCT10A10A	1
60	67000216	CAP TUBE ASSY KIT (INCLUDES CAP TUBE ASSY (PN 62106807), STRAINER, AND STRAINER HOLDER	WHT12A33A	1
65	60141125	DISTRIBUTOR ASSY	WHT12A33A	1
65	62105013	DISCHARGE TUBE ASSY	WET16A33, WCT16A30A	1
65	62104626	DISCHARGE TUBE ASSY	WET12A33A, WCT12A30A	1
65	61941226	DISCHARGE TUBE ASSY	WET10A33A, WET16A33A, WCT10A30A	1
65	62104634	DISCHARGE TUBE ASSY	WCT12A30B	1
65	62104627	DISCHARGE TUBE ASSY	WCT12A10A	1
65	62104637	DISCHARGE TUBE ASSY	WCT12A10B	1
65	62105017	DISCHARGE TUBE ASSY	WCT08A10A, WCT10A10A	1
70	62107015	ASSY TUBE CHECK VALVE TO EVAP	WHT12A33A	1
70	61762222	SUMP TUBE ASSY	WET16A33A, WET12A33A, WCT12A10A, WCT12A10B, WCT12A30A, WCT12A30B, WCT16A30A	1
70	61762211	SUMP TUBE ASSY	WET10A33A, WCT10A30A	1
70	61762206	SUMP TUBE ASSY	WCT08A10A, WCT10A10A	1
75	61835001	STRAINER HOLDER	ALL	1
80	61834800	STRAINER .312 COIL	ALL	1
85	61710945	ASSY 4-WAY VALVE & TUBE INCLUDES REVERSING VALVE PN 25018305	WHT12A33A	1
90	25018305	REVERSING VALVE, 4-WAY DUNAN INCLUDES SOLENOID VALVE PN 25063605	WHT12A33A	
95	25063605	COIL SOLENOID 208/230VAC DUNAN	WHT12A33A	1
100	60179904	CONDENSATE DRAIN VALVE	WHT12A33A, WET10A33A, WET12A33A, WET16A33A	1

-ITEMS ARE NON- ILLUSTRATED
*ITEMS ARE NON-STOCKED, WILL NORMALLY REQUIRE 2-3 WEEKS LEAD TIME

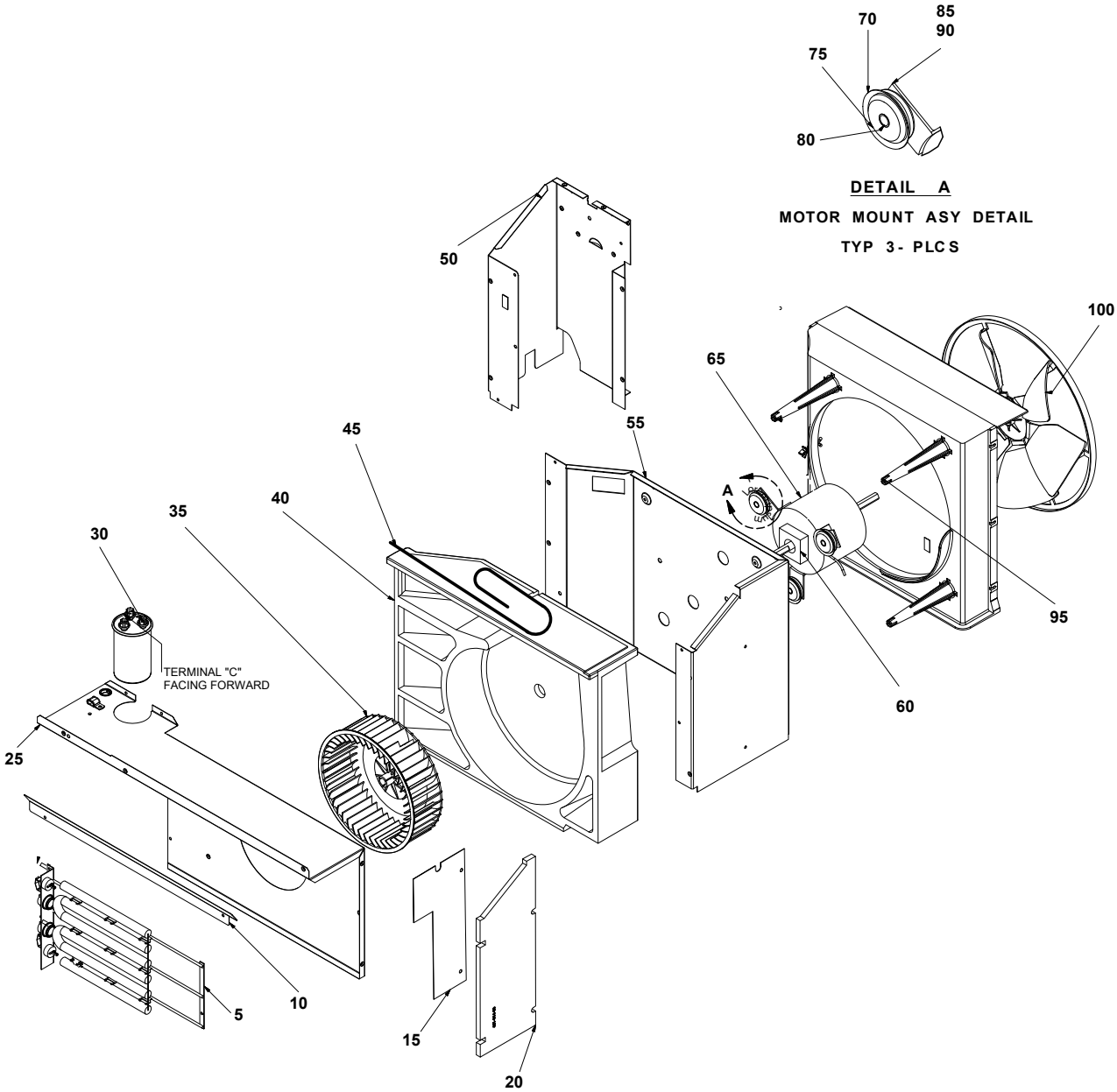

FIgure 903 (Blower Module)

FIGURE 903				
ITEM	PART NUMBER	PART DESCRIPTION	USED ON MODEL	QTY
5	62101210	HEATER 3.4 KW TTW @ 230V	WHT12A33A, WET10A33A, WET12A33A, WET16A33A	1
10	61999802	FLANGE AIR DEFLECTOR	ALL	1
15	61821800	SHIELD HEAT SMALL	WHT12A33A, WET10A33A, WET12A33A, WET16A33A	1
20	62101400	INSUL R/SIDE TTW	ALL	1
25	62100601	BLOWER FRONT 2" CAP TTW	WHT12A33A, WET10A33A, WET12A33A, WCT08A10A, WCT10A10A, WCT10A30A, WCT12A30A, WCT12A30B	1
25	62100600	BLOWER FRONT 2 1/2" CAP TTW	WET16A33A, WCT12A10A, WCT12A10B, WCT16A30A	1
30	61080523	CAPTCR 25/12.5/450VAC 2.0	WHT12A33A, WET12A33A, WCT12A30A, WCT12A30B	1
30	61080584	CAPCTR 25/5 MF 450V 2.0	WET10A33A, WCT10A30A,	1
30	61080591	CAPCTR 40/7.5 MF 450V 2.5	WET16A33A, WCT16A30A	1
30	61080569	CAPCTR 60/10 MF 370V 2.5	WCT12A10A	1
30	61080605	CAPCTR 70/10 MF 370V 2.5	WCT12A10B	1
30	61080582	CAPCTR 55/10 MF 370V 2.0	WCT08A10A, WCT1010A	1
35	60610626	WHEEL BLWR 7.00X6.43X3X59	ALL	1
40	62102100	SCROLL TTW	ALL	1
45	60500388	SUPPLY CORD 20A 250V 12AWG STR ELE	WHT12A33A,, WET10A33A, WET12A33A, WET16A33A	1
45	60500384	SUPPLY CORD 13A 250V 16AWG STR ELE	WCT10A30A, WCT12A30A, WCT12A30B, WCT16A30A	1
45	60500382	SUPPLY CORD 15A 125V 14AWG STR ELE	WCT08A10A, WCT10A10A, WCT12A10A, WCT12A10B	1
50	62100150	L/S PANEL 05 WLMSTR	ALL	1
55	62108800	INNERWALL SPOTWELD ASSY	ALL	1
60	60217902	SEAL FAN MTR TO INNER WALL	ALL	1
65	61871532	MTR 1/5 1 6P CCW 2 ECM	WHT12A33A	1
65	61871503	MTR 1/10 4 6P CCW 2 PSC 5 WM	WET10A33A	1
65	61871479	MTR 1/6 4 4P CCW 2 PSC 12.5 WM	WET12A33A, WCT12A30A, WCT12A30B	1
65	61871537	MTR 1/4 4 4P CCW 2 PSC 7.5 WM	WET16A33A, WCT16A30A	1
65	61871477	MTR 1/10 1 6P CCW 2 PSC 10 WM	WCT08A10A, WCT10A10A	1
65	61871503	MTR 1/10 4 6P CCW 2 PSC 5 WM	WCT10A30A	1
65	61871476	MTR 1/5 1 4P CCW 2 PSC 10 WM	WCT12A10A, WCT12A10B	1
70	60640600	CUP RETAINER	ALL	3
75	60640500	GROMMET BISCUIT #64045	ALL	3
80	01336910	SLEEVE 7/16 11- 32X9/16 PR 258	ALL	3
85	91100700	WASHER CONICAL	ALL	3
90	91003000	NUT HEX .312-18 SELF LOCKING	ALL	3
95	62102000	SHROUD TTW	ALL	1
100	62101505	FAN 13" CW 6BL .500	ALL	1
-105	62100700	COVER TOP TTW	WHT12A33A, WET16A33A	1
-ITEMS ARE NON- ILLUSTRATED *ITEMS ARE NON-STOCKED, WILL NORMALLY REQUIRE 2-3 WEEKS LEAD TIME				

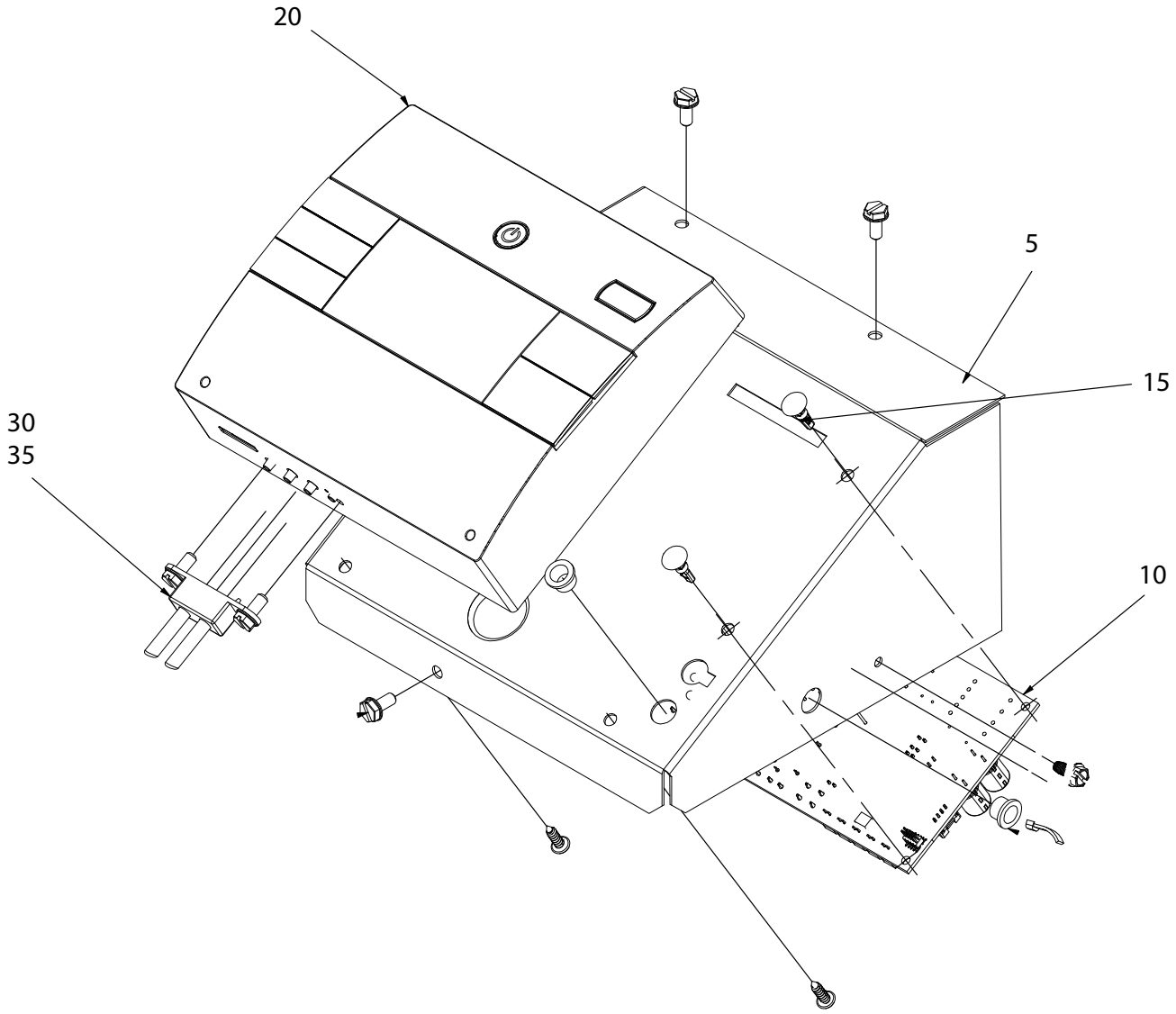

FIgure 904 (User Interface)

FIGURE 904				
ITEM	**PART NUMBER**	**PART DESCRIPTION**	**USED ON MODEL**	**QTY**
5	62100007	PANEL CONTROL MOUNTING WM 2019	ALL	1
10	67000182	ELECTRONIC CONTROL BOARD KIT RAC MASTER POWER/RELAY MODULE SMPS - 3SP/ COOL/EH/HP (PN 62603075) PIN, CIRCUIT BOARD 4 EA (PN 61600527)	WHT12A33A	1
10	67000178	ELECTRONIC CONTROL BOARD KIT RAC MASTER POWER/RELAY MODULE SMPS - 3SP/ COOL/EH (PN 62603071) Pin, circuit board 4 EA (PN 61600527)	WET10A33A, WET12A33A, WET16A33A	1
10	67000181	ELECTRONIC CONTROL BOARD KIT RAC MASTER POWER/RELAY MODULE SMPS - 3SP/ COOL (PN 62603074) PIN, CIRCUIT BOARD 4 EA (PN 61600527)	WCT08A10A, WCT10A10A, WCT12A10A, WCT10A30A,WCT12A30A, WCT16A30A	1
15	61600527	STANDOFF PIN CIRCUIT BOARD KCQ'S 2019	ALL	4
20	670000209	WALLMASTER USER INTERFACE KIT FRONT PANEL ASSY (PN 62606058) U/I CABLE (PN 62603092) BUTTON HOUSING (61607020) 61607021 (PIN BUTTON)	ALL	1
-25	62603092	RAC GEN IV - USER INTERFACE CABLE Q/WM KUHL	ALL	1
30	61607020	BUTTON HOUSING	ALL	1
35	61607021	PIN BUTTON	ALL	2
-40	67000208	SENSOR KIT SENSOR ID COIL TEMP (YL) GEN3 (PN 62600213) SENSOR OD COIL TEMP (BL) GEN3 (PN 62600214) SENSOR INDR R/A TEMP (WT) GEN3 (PN 62600217) SENSOR DISCH TEMP (BK) GEN3 (PN 62600216)	ALL	1
-ITEMS ARE NON- ILLUSTRATED *ITEMS ARE NON-STOCKED, WILL NORMALLY REQUIRE 2-3 WEEKS LEAD TIME				

AVAILABLE ACCESSORIES

WSE Sleeve/ Exterior Grilles

Standard Grille
Premium, expanded metal grille with powder coat paint. Ships with WSE sleeve.

Optional Architectural Grille- AG
Premium extruded aluminum grille.

INCORRECT Horizontal Louvers

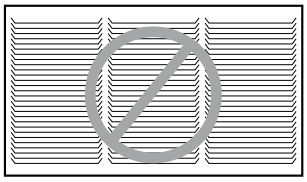

IMPORTANT:

Operating the air conditioner with incorrect rear grille or without Baffle Adapter Kit (on 19¾" deep sleeve) will recirculate discharge air and cause compressor overload to trip.

This will cause the unit to shut down temporarily and may lead to premature compressor failure.

CORRECT Vertical Louvers

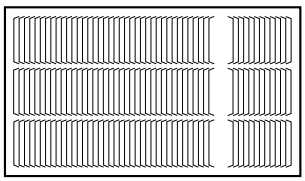

WSE Wall Sleeve
Ships with standard grille (shown above) and standard galvanized steel inner panel

WSE sleeve

Steel inner

Outer weather panel

Installation Accessories

DK / Drain Kit
Installed at the back of the unit and allows for attachment to condensate disposal system,if necessary or desired.

IDK / Internal Drain Kit
New construction applications where a condensate drain system has been built into the wall interior.

BAK / Baffle Adapter Kit
Necessary when installing in a sleeve deeper than 16¾" deep, such as Fedders B sleeve

Friedrich Air Conditioning Company
10001 Reunion Place, Suite 500
San Antonio, TX 78216
800-541-6645
www.friedrich.com

KUHL® ROOM AIR CONDITIONERS LIMITED WARRANTY

FIRST YEAR

ANY PART: If any part supplied by FRIEDRICH fails because of a defect in workmanship or material within twelve months from date of original purchase, FRIEDRICH will repair the product at no charge, provided room air conditioner is reasonably accessible for service. Any additional labor cost for removing inaccessible units and/or charges for mileage related to travel by a Service Agency that exceeds 25 miles one way will be the responsibility of the owner. This remedy is expressly agreed to be the exclusive remedy within twelve months from the date of the original purchase.

SECOND THROUGH FIFTH YEAR

SEALED REFRIGERANT SYSTEM: If the Sealed Refrigeration System (defined for this purpose as the compressor, condenser coil, evaporator coil, reversing valve, check valve, capillary, filter drier, and all interconnecting tubing) supplied by FRIEDRICH in your Room Air Conditioner fails because of a defect in workmanship or material within sixty months from date of purchase, FRIEDRICH will pay a labor allowance of $100 and parts necessary to repair the Sealed Refrigeration System; PROVIDED FRIEDRICH will not pay any additional labor charges over the prescribed labor allowance including the cost of diagnosis of the problem, removal, freight charges, and transportation of the air conditioner to and from the Service Agency, and the reinstallation charges associated with repair of the Sealed Refrigeration System. All such cost will be the sole responsibility of the owner. This remedy is expressly agreed to be the exclusive remedy within sixty months from the date of the original purchase.

APPLICABILITY AND LIMITATIONS: This warranty is applicable only to units retained within the Fifty States of the U.S.A., District of Columbia, and Canada. This warranty is not applicable to:

1. Air filters, fuses, batteries and the front grille removal tool.
2. Products on which the model and serial numbers have been removed.
3. Products which have defects or damage which results from improper installation, wiring, electrical current characteristics, or maintenance; or caused by accident, misuse or abuse, fire, flood, alterations and/or misapplication of the product and/or units installed in a corrosive atmosphere, default or delay in performance caused by war, government restrictions or restraints, strikes, material shortages beyond the control of FRIEDRICH, or acts of God.

OBTAINING WARRANTY PERFORMANCE: Service will be provided by the FRIEDRICH Authorized Dealer orService Organization in your area. They are listed in the Yellow Pages. If assistance is required in obtaining warranty performance, write to: Room Air Conditioner Service Manager (the Friedrich address is at the top of this w arranty) or email tac@friedrich.com.

LIMITATIONS: THIS WARRANTY IS GIVEN IN LIEU OF ALL OTHER WARRANTIES. Anything in the warranty notwithstanding, ANY IMPLIED WARRANTIES OF FITNESS FOR PARTICULAR PURPOSE AND/OR MERCHANTABILITY SHALL BE LIMITED TO THE DURATION OF THIS EXPRESS WARRANTY. MANUFACTURER EXPRESSLY DISCLAIMS AND EXCLUDES ANY LIABILITY FOR CONSEQUENTIAL OR INCIDENTAL DAMAGE FOR BREACH OF ANY EXPRESSED OR IMPLIED WARRANTY.
Performance of Friedrich's Warranty obligation is limited to one of the following methods:

1. Repair of the unit
2. A refund to the customer for the prorated value of the unit based upon the remaining w arranty period of the unit.
3. Providing a replacement unit of equal value

The method of fulfillment of the warranty obligation is at the sole discretion of Friedrich Air Conditioning.

NOTE: Some states do not allow limitations on how long an implied w arranty lasts, or do not allow the limitation or exclusion of consequential or incidental damages, so the foregoing exclusions and limitations may not apply to you.

OTHER: This w arranty gives you specific legal rights, and you may also have other rights w hich vary from state to state.

PROOF OF PURCHASE: Ow ner must provide proof of purchase in order to receive any w arranty related services.

All service calls for explaining the operation of this product w ill be the sole responsibility of the consumer.

All warranty service must be provided by an **Authorized FRIEDRICH Service Agency,** unless authorized by FRIEDRICH prior to repairs being made.

THIS PAGE LEFT INTENTIONALLY BLANK.

CUSTOMER SATISFACTION and QUALITY ASSURANCE

Friedrich is a conscientious manufacturer, concerned about customer satisfaction, product quality, and controlling warranty costs. As an Authorized Service Provider you play a vital role in these areas. By adhering to the policies and procedures you provide us with vital information on each warranty repair you complete. This information is used to identify product failure trends, initiate corrective action, and improve product quality, thereby further reducing warranty expenses while increasing customer satisfaction levels.

FRIEDRICH AUTHORIZED PARTS

AAA Refrigeration Service
1322 24th Street, Suite B Kenner,
Louisiana 70062

504-464-7444
877-813-7444

The Gabbert Company
6868 Ardmore
Houston, Texas 77054

713-747-4110
800-458-4110

Johnstone Supply of Woodside
27-01 Brooklyn Queens Expway
Woodside, New York 11377

718-545-5464
800-431-1143

Reeve Air Conditioning, Inc.
2501 South Park Road
Hallandale, Florida 33009

954-962-0252
800-962-3383

FRIEDRICH

TECHNICAL SUPPORT CONTACT INFORMATION

PTAC Direct Sales, Inc.
185 S. Kimball Ave. Suite 130
Southlake, TX 76092
877.454.7822 (T)