TP-N-731W(O)

VIVE COMFORT

Vive Comfort
P.O. Box 3377
Springfield, MO 65804
Toll Free : 888-776-1427
Web: www.vivecomfort.com
Hours of Operation: M-F 9AM - 6PM Eastern

VM-731WO-IM-2443

Thermostat Application Guide

Description	
Gas or Oil Heat	Yes
Electric Furnace	Yes
Heat Pump (No Aux. or Emergency Heat)	Yes
Heat Pump (With Electric Aux.)	Yes
Heat Pump (With Gas Aux.)	No
Multi-Stage Systems	Yes
Heat Only Systems - Floor or Wall Furnace	Yes
Cool Only Systems	Yes
High, Medium and Low Fan Speed	Yes
Millivolt	No
Emergency Heat	No
Conventional Single Stage Furnace	Yes
Geothermal	Yes

Table of Contents

	Page
Installation Tips	2-3
Thermostat Quick Reference	4-5
Base Module Mounting Tips	6-7
Wiring	8-11
Technician Setup	12-16
Establishing Communication	17-18
Network Specifications	19
Specifications	20

Power Type

Battery Power
Hardwire (Common Wire)
Hardwire (Common Wire) with Battery Backup

A trained, experienced technician must install this product.

Carefully read these instructions. You could damage this product or cause a hazardous condition if you fail to follow these instructions.

Una version en español de este manual se puede descargar en la pagina web de la compañia.

PTAC DIRECT SALES, INC.
185 S. KIMBALL AVE., SUITE 130
SOUTHLAKE, TX 76092
877.454.7822
www.PTACdirect.com

® U.S. Registered Trademark. Patents pending
Copyright ©2024 All Rights Reserved.

Rev. 2443

Wall Locations

The thermostat should be installed approximately 4 to 5 feet above the floor. Select an area with average temperature and good air circulation.

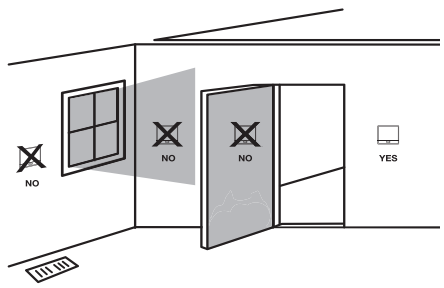

Do not install thermostat in locations:

- Close to hot or cold air ducts
- That are in direct sunlight
- With an outside wall behind the thermostat
- In areas that do not require conditioning
- Where there are dead spots or drafts (in corners or behind doors)
- Where there might be concealed chimneys or pipes

Installation Tip

Pick an installation location that is easy for the user to access. The temperature of the location should be representative of the building.

Subbase Installation

① Horizontal Mount
② Vertical Mount

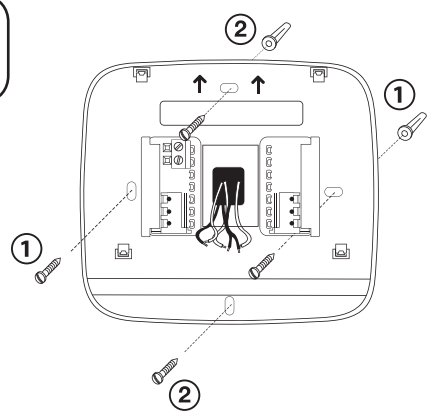

For vertical mount put one screw on the top and one screw on the bottom.

For horizontal mount put one screw on the left and one screw on the right.

Installation Tip: Electrical Hazard

Failure to disconnect the power before beginning to install this product can cause electrical shock or equipment damage.

Mercury Notice

All of our products are mercury free. However, if the product you are replacing contains mercury, dispose of it properly. Your local waste management authority can give you instructions on recycling and proper disposal.

Mount Thermostat

Align the 4 tabs on the subbase with corresponding slots on the back of the thermostat, then push gently until the thermostat snaps in place.

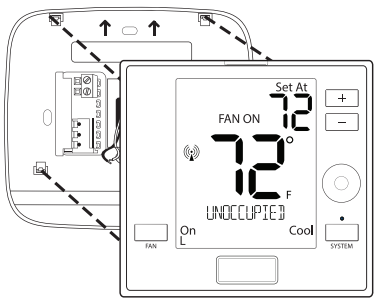

Battery Installation

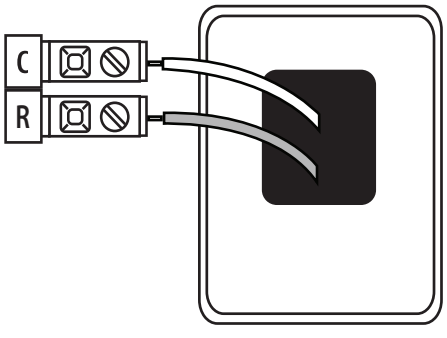

Battery installation is optional if thermostat is hardwired (R and C terminal connected to 24V power).

Important:

High quality alkaline batteries are recommended. Rechargeable batteries or low quality batteries do not guarantee a 1-year life span.

Insert 2 AA Alkaline batteries (included). High quality alkaline batteries are recommended.

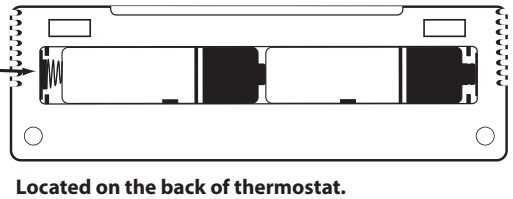

Located on the back of thermostat.

Getting to know your thermostat

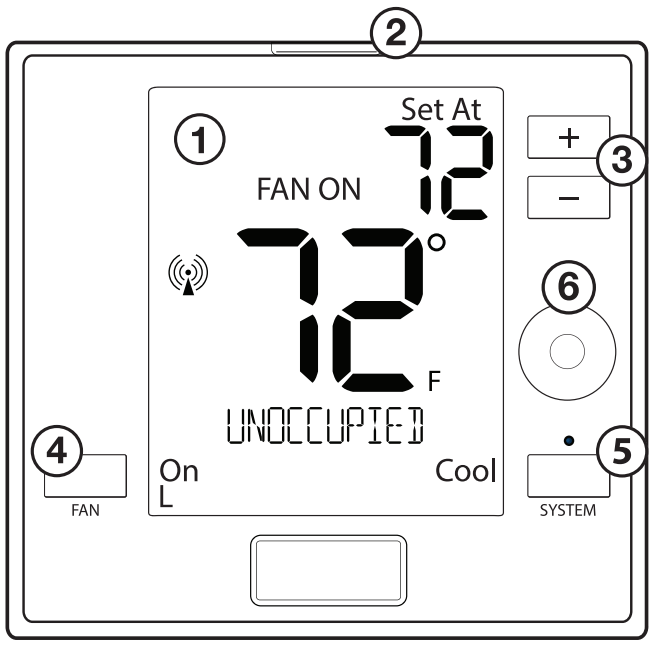

① LCD
② Glow in the Dark Light Button
③ Setpoint Buttons
④ Fan Button
⑤ System Button
⑥ Occupancy Sensor (Occupancy Model Only)

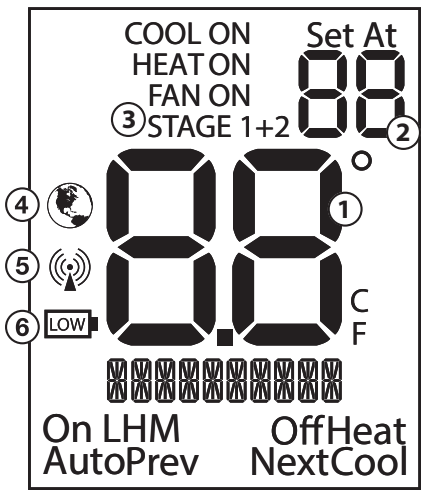

① **Ambient Temperature:**
Displays the current room temperature

② **Set At Temperature:**
Displays the selected desired room temperature.

③ **Staging Indicators:**
If these or the fan indicators are flashing, it means that the system is in a delay of some type (compressor delay, cooling fan delay, or staging delay) or a pending change.

④ **Energy Efficient Globe:**
Indicates you are making an energy efficient set at temperature.

⑤ **Wireless Symbol:** Indicates you have a wireless connection.

⑥ **Low Battery Indicator:** Replace batteries when this indicator appears.

Important

The low battery indicator is displayed when the AA battery power is low. If the user fails to replace the battery within 21 days, the screen will only show the low battery indicator but maintain all functionality. If the user fails to replace the batteries after an additional 21 days (days 22-42 since first "low battery" display) the setpoints will change to 55˚F (Heating) and 85˚F (Cooling). If the user adjusts the setpoint away from either of these, it will hold for 4 hours then return to either 55˚F or 85˚F. After day 63 the batteries must be replaced immediately to avoid freezing or overheating because the thermostat will shut the unit off until the batteries are changed.

Base Module - PTAC Installation

Range between the thermostat and the base module is up to 100 feet with no obstructions and up to 50 feet through standard building materials. To optimize the range try placing the base module with no metal between it and the thermostat.

The base module is designed to be mounted behind the front grille of a packaged terminal air conditioner (PTAC). Refer to the PTAC manufacturer's manual for instruction to remove the front grille. Check clearance to ensure the fit of front grille after base module installation. See below for a few location recommendations.

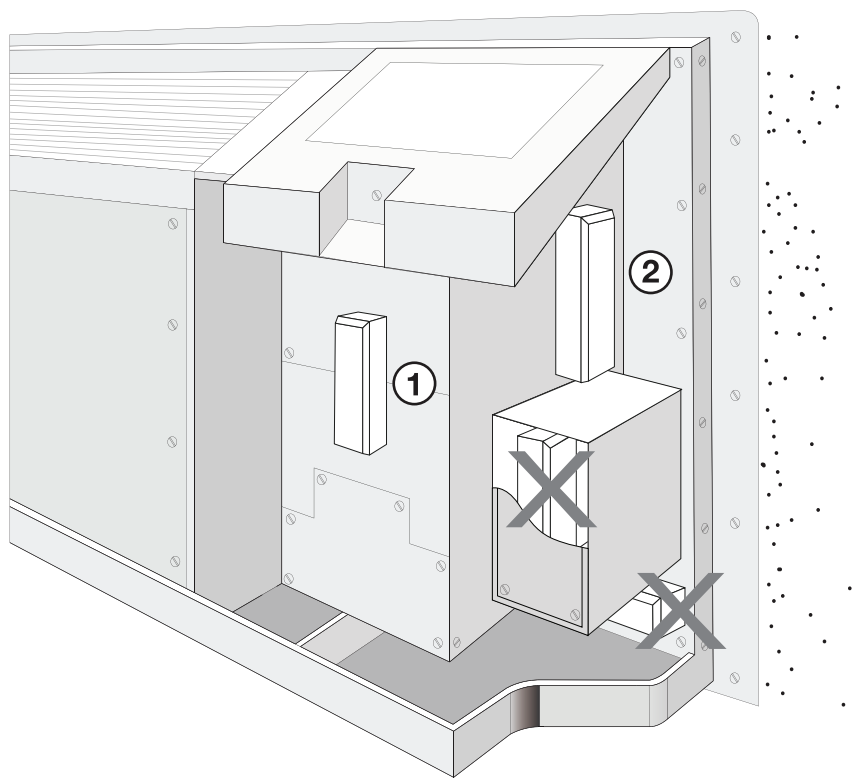

① **Front Mount:** Inside PTAC Housing

② **Side Mount:** Inside PTAC Housing

When Working With A Vertical Unit

1. Do not mount Module inside the cabinet of the unit, or in a metal enclosure.
2. Mount on the outside of the unit to maximize wireless communication.

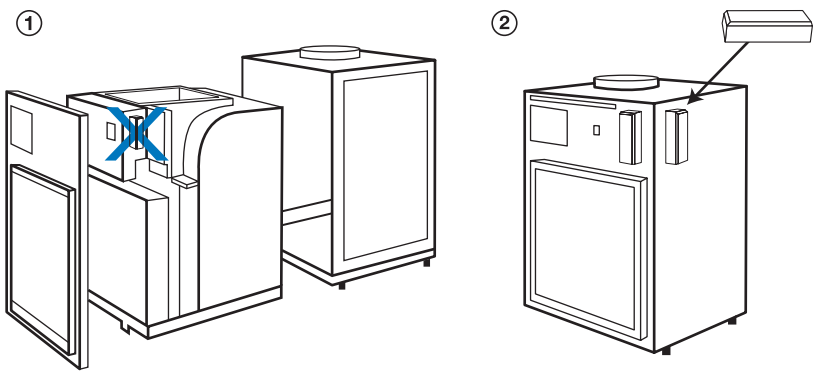

When Working With A Metal Sleeve Cabinet, Room Cabinet, or PTAC Cover

1. If cabinet has open bottom, mount the module just inside the cabinet as close to the open bottom as possible without placing it in danger of being bumped or touched by furnishings, vaccum, etc.

2. Another good module location would be on the underside of the top of the cabinet or cover. Directly behind the open Louver/Grill.

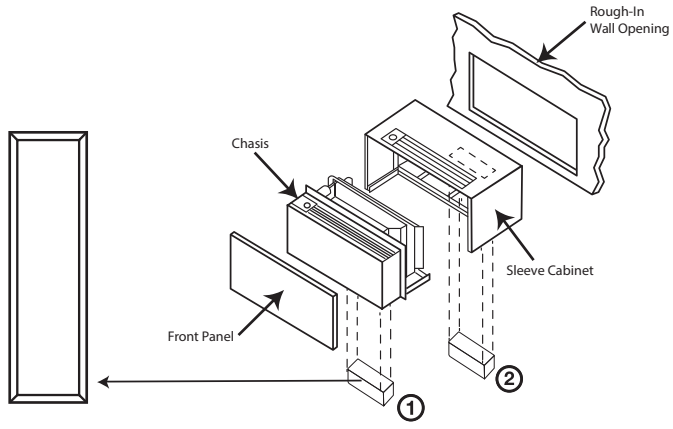

Caution: Electrical Hazard

Failure to disconnect the power before beginning to install this product can cause electrical shock or equipment damage.

Warning:

All components of the control system and the thermostat installation must conform to Class II circuits per the NEC Code.

Wiring

1. If you are replacing a thermostat, make note of the terminal connections on the thermostat that is being replaced. In some cases the wiring connections will not be color coded. For example, the green wire may not be connected to the G terminal.
2. Loosen the terminal block screws. Insert wires then retighten terminal block screws.
3. Place nonflammable insulation into wall opening to prevent drafts.

Installation Tip

Do not overtighten terminal block screws, as this can damage the terminal block. A damaged terminal block can keep the thermostat from fitting on the subbase correctly or cause system operation issues.

Max Torque = 6in-lbs.

Terminal Designations

	Heat Pump System 1 HEAT 1 COOL / 2 HEAT 1 COOL	Conventional System 1 HEAT 1 COOL
R	Transformer Power	Transformer Power
C	Transformer Common	Transformer Common
B	Changeover Valve Energized in HEAT	N/A
O	Changeover Valve Energized in COOL	N/A
GL	Fan Relay, Low	Fan Relay, Low
GH	Fan Relay, High	Fan Relay, High
W	Second Stage of HEAT	First Stage of HEAT
Y	First Stage of HEAT and COOL	First Stage of COOL

Wiring Note:

The base module is packaged with labeled thermostat wire. Wire appropriately into the PTAC board terminals.

Note:

The thermostat and Base Module come factory linked (communicating) out of the box. However, if the link is lost, use the process on page 14 to re-link the devices.

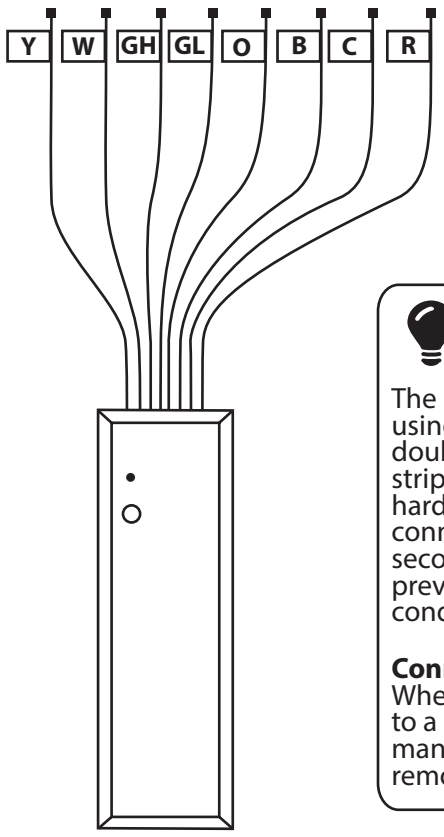

Note:

The base module may be mounted using adhesive tape, such as double-sided tape or hook and loop strips. The base module must be hardwired (C & R terminals connected to 24V power). Use secondary source of securement to prevent module from dropping into condenser drain pan.

Connecting to a PTAC:
When connecting the Base Module to a PTAC, refer to the PTAC manufacturer instructions to enable remote thermostat operation.

Caution: Electrical Hazard

Failure to disconnect the power before beginning to install this product can cause electrical shock or equipment damage.

Warning:

All components of the control system and the thermostat installation must conform to Class II circuits per the NEC Code.

Thermostat Wiring Tips

C Terminal

The C (common wire) terminal does not have to be connected when the thermostat is powered by batteries.

Wire Specifications

Use shielded or non-shielded 18-22 gauge thermostat wire.

Note:

Most PTAC systems support two speed fan operation. In a single speed fan PTAC system or conventional single speed fan system, the GL terminal will be used and "I" must be selected in the Fan Speeds Tech Settings.

1. **Power supply**
2. **The thermostat must be set to O or B to match the changeover valve, O is the cool changeover valve, B is the heat chageover valve.**
3. **The Aux. Heat Relay is energized as the second stage of heat.**

Typical 1H/1C System: 2 Speed Fan

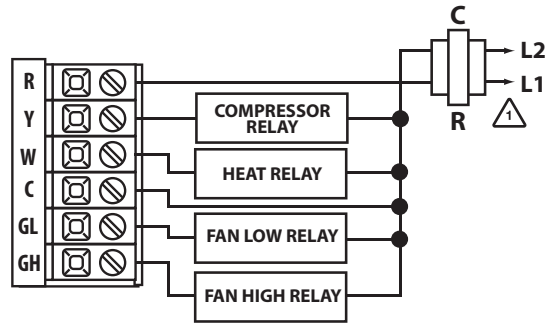

Typical 1H/1C System: 1 Speed Fan

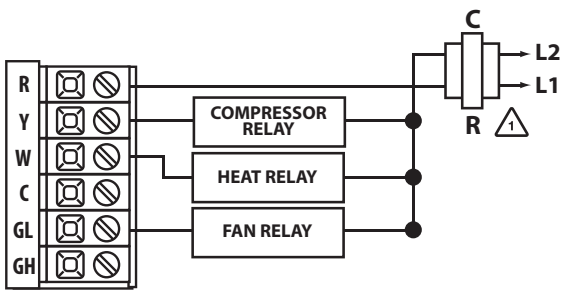

Typical 1H/1C Heat Pump System: 2 Speed Fan

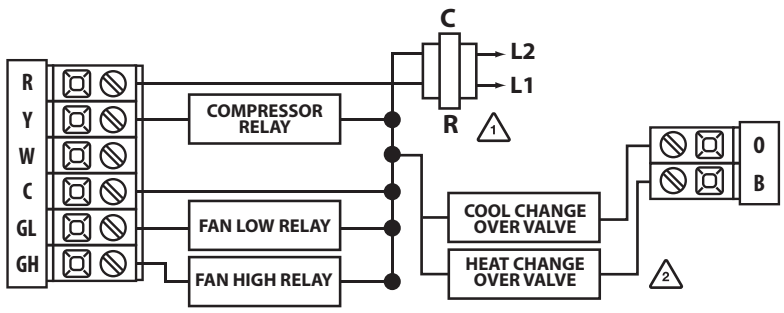

Typical 2H/1C Heat Pump System: 2 Speed Fan

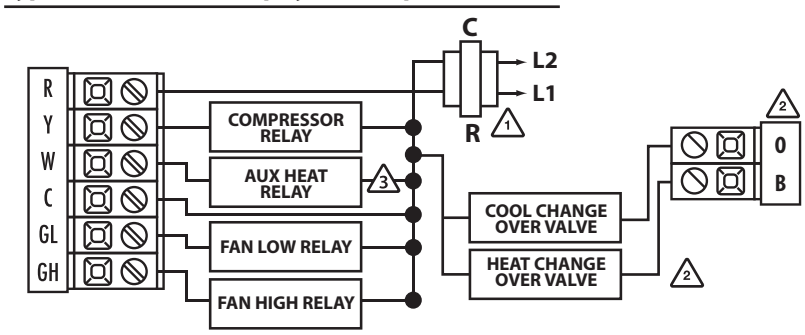

1. To enter Tech Setup Menu, press and hold [-] and [+] together for 3 seconds.
2. Use [-] or [+] to select the desired valve for each setting.
3. Tap previous or next to select different tech settings.
4. To exit Tech Setup Menu, press and hold [-] and [+] together for 3 seconds or wait 60 seconds.

Important Tech Setting Notes

1. Tech settings must be transferred to the base module.
2. The transfer happens automatically when you exit the tech menu.

Tech Setup Steps		LCD Will Show	Adjustment Options	Default
Room Temperature Calibration	This feature allows the installer to change the calibration of the ambient room temperature display. For example, if the thermostat reads 70 degrees and you would like it to read 72 then select +2.	0 CALIBRATE	4˚ - -4˚	0˚F
Cooling Swing	The swing setting, often called "cycle rate", "differential" or "anticipation" is adjustable and dictates how frequenlty the system cycles on and off. For example: A swing setting of 0.8˚ will turn the cooling on at approximately 0.8˚ above the setpoint and turn the cooling off at approximately 0.8˚ below the setpoint.	0.8 COOL SWING	0.2˚ - 2˚	0.8˚
Heating Swing	The swing setting, often called "cycle rate", "differential" or "anticipation" is adjustable and dictates how frequenlty the system cycles on and off. For example: A swing setting of 0.8˚ will turn the heating on at approximately 0.8˚ below the setpoint and turn the heating off at approximately 0.5˚ above the setpoint.	0.8 HEAT SWING	0.2˚ - 2˚	0.8˚

Tech Setup Steps		LCD Will Show	Adjustment Options	Default
Fan Operation	Select Gas (GS) for applications where the air handlers controls the fan during a call for heat. Slect Electric (EL) if you would like the thermostat to control the fan during a call for heat.	EL FAN SET	EL = Electric for thermostat control GA = Gas for system control	Electric
Fan Speeds	Select number of fan stages you would like the thermostat to operate.	2 FAN SPEEDS	1 = 1 Speed: On, Auto 2 = 2 Speed: Low (On L), High (On H), Auto 3 = 3 Speed: Low (On L), Med (On M), High (On H), Auto	2 Speed: Low High Auto
Medium Speed Fan Terminal Designation	Select the terminal you would like to use to operate the medium speed fan. (only if fan speed is set to 3)	O M FAN TERM	O or B	O
F or C	Select F for Fahenheit temperature or C for Celsius.	°F °F OR °C SET	F = Fahrenheit C = Celsius	F
Display Light	The display light can be configured to stay on permanently or only when a key is pressed. NOTE: HARDWIRE ONLY. Keeping the display light continually "ON" will greatly reduce battery life.	OF dL DISP LIGHT	OF = OFF configures the display light to come on when the light key or any button is pressed. LO = LOW configures the display light to stay on at a lower intensity until a button is pressed and then it goes to the normal high intensity. HI = HIGH configures the display light to stay on at normal high intensity all the time.	OFF when battery powered / LOW when hardwired
Heat Pump	When turned on the thermostat will operate a heat pump. Y will be the first stage of heat & cool, W will be the second stage of heat.	OF HEAT PUMP	OFF configures the thermostat for non heat pump systems. ON configures the thermostat for heat pump systems.	OFF

Tech Setup Steps		LCD Will Show	Adjustment Options	Default
Compressor Short Cycle	This setting protects the compressor from "short cycling". When ON, the compressor will delay for 5 minutes after it was last turned off.	ON COMP DELAY	ON = Turns 5 minute delay on OF(OFF) = Removes the delay	ON
Heating Temperature Setpoint Limit	Set a maximum heat setpoint value. Once set, the setpoint temperature cannot be raised above this value.	90 HE HEAT LIMIT	45.0 - 90.0° F 7.0 - 32.0° C	90°
Cooling Temperature Setpoint Limit	Set a minimum cool setpoint valve. Once set, the setpoint temperature cannot be lowered below this value.	44 44 COOL LIMIT	45.0 - 90.0° F 7.0 - 32.0° C	44°
Enter Network (Only displayed if you are not paired)	This setting is a secondary way to pair the thermostat with the base module.	P NE START PAIR	Press the "+" button to enter paring mode	N/A
Exit Network (Only displayed if you are not paired)	Exit network (only displayed if you are paired).	UP NE UNPAIR	Press the "+" button to exit the network	N/A
Signal Strength (Only shows if you are paired)	View the strength of the wireless signal. 1 indicates a weak signal and 5 indicates a strong signal.	3 SIG STR	1-5	N/A

Occupancy Models Only

Tech Setup Steps		LCD Will Show	Adjustment Options	Default
Local Occupancy Sensor	When using the Occupancy model the installer can choose to utilize the occupancy sensor to set back the room temperature while it is not being occupied.	OF OCC SENSOR	ON OF(OFF)	OF
Duration of Occupancy (Only displayed if Local Occupancy Sensor is ON)	When the occupancy sensor is turned on you have the ability to set how long the thermostat will go into occupancy mode everytime a person is sensed.	8 OCC LENGTH	0.5 = 30 minutes, 1 = 1 hour, 2 = 2 hours, 3 = 3 hours, 4 = 4 hours, 5 = 5 hours, 6 = 6 hours, 7 = 7 hours, 8 =8 hours, 9 = 9 hours, 10 = 10 hours, 11 = 11 hours, and 12 = 12 hours.	8
Occupied Cool Setting (Only displayed if Local Occupancy Sensor is ON)	Set the cooling temperature and fan operation that you would like the system to be while the space is being occupied.	75 OCC COOL	Full temperature range defined by setpoint limits. First adjust the temperature using the + and – buttons. Use the Fan button to change the fan operation.	75°
Occupied Heat Setting (Only displayed if Local Occupancy Sensor is ON)	Set the heating temperature and fan operation that you would like the system to be while the space is being occupied.	70 OCC HEAT	Full temperature range defined by setpoint limits. First adjust the temperature using the + and – buttons. Use the Fan button to change the fan operation.	70°
Unoccupied Cool Setting (Only displayed if Local Occupancy Sensor is ON)	Set the cool temperature and fan operation that you would like the system to be while the space is unoccupied.	83 UNOCC HEAT	Full temperature range defined by setpoint limits. First adjust the temperature using the + and – buttons. Use the Fan button to change the fan operation. normal high intensity all the time.	83°
Unoccupied Heat Setting (Only displayed if Local Occupancy Sensor is ON)	Set the heat temperature and fan operation that you would like the system to be while the space is unoccupied.	62 UNOCC COOL	Full temperature range defined by setpoint limits. First adjust the temperature using the + and – buttons. Use the Fan button to change the fan operation.	62°

Occupancy Models Only

Tech Setup Steps		LCD Will Show	Adjustment Options	Default
Occupancy Sensitivity Setting (Only displayed if Local Occupancy Sensor is ON)	Set the level of sensitivity of the occupancy sensor. Lowering the sensitivity will cause the sensor to respond only to larger movements.	HI SENSITIVITY	HI - High Sensitivity: This is the most sensitive setting and will detect very slight motions. This is the recommended setting because it will work well for nearly all applications, and will detect any movement. NL - Normal Sensitivity: This is the medium sensitive setting and can be used without pets setting it off. LO - Low Sensitivity: This is the least sensitive setting and can be used in areas of heavy traffic. This will not be set off by pets, small children, or people more than 20' from the sensor location.	HI
Night Occupancy Mode	This feature maintains the desired occupied temperature while the user is sleeping. When the thermostat senses all lights have been turned off for over one minute and then senses motion, the thermostat will consider the room occupied for 8 hours regardless of the duration of occupancy setting.	OF NIGHT OCC	ON OF (OFF)	OF
Cycle Minimizer (Only displayed if local Occupancy Sensor is ON)	Maximize efficiency and equipment longevity by increasing the heating and cooling swing settings to 2.0° during the unoccupied and leave time periods. This will result in significantly fewer system cycles.	OF CYCLE MIN	ON OF (OFF)	OF

Establishing Communication between the thermostat & the base module

The thermostat and base module in this package are linked at our factory. Upon power up they will automatically begin communicating. If you wish to make any changes to the network such as adding or removing devices, please follow the instructions on this page.

How To Pair

On the Base module:

1. Press the button next to the LED once.
2. The Base module will begin double blinking pink for 2 minutes while it waits for a remote to join.
3. Once a device joins, the LED will show green blinks and return to normal operating mode.
4. To add another device, repeat the process.

On the Thermostat:

1. Press and hold the light button for 3 seconds. The LED will flash 3 times and pair with the base module.
2. The thermostat will attempt to connect to a base module within range
3. Once paired, the LCD will temporarilly display "PAIRED" when it joins with a base module.

How To Unpair

On the Base Module:

1. PRESS and HOLD the button next to the LED for 6 seconds.
2. The Base module LED will turn RED for 6 seconds.
3. All connected devices will be deleted.

On the Thermostat:

1. Enter the "UNPAIRING" tech menu.
2. Press and hold the "+" button.
3. The LCD will show "UNPAIRED".
4. The Thermostat will no longer be connected to a network.

Establishing A Connection

Base Module LED Information

The base module's LED is used to communicate the status of the wireless network.

- Green Blink at 3s: Normal operating mode. All devices are connected and healthy.
- Yellow Blink at 3s: Normal operating mode. One or more (but not all) remote devices are NOT reporting.
- Red Blink at 3s: Normal operating mode. ALL network devices are NOT reporting.
- White Blink at 3s: Unpaired mode. Base module is powered but is NOT paired to any remotes.
- Blue double blink: Transmission received from a remote.
- Purple double blink: Base module is in pairing mode waiting for a remote.
- Green 5 quick blinks: A remote has successfully been added to the basemodules network.

Note:

This equipment has been tested and found to comply with the limits for a Class B digital device, pursuant to part 15 of the FCC Rules. These limits are designed to provide reasonable protection against harmful interference in a residential installation. This equipment generates, uses and can radiate radio frequency energy and, if not installed and used in accordance with the instructions, may cause harmful interference to radio communications. However, there is no guarantee that interference will not occur in a particular installation. If this equipment does cause harmful interference to radio or television reception, which can be determined by turning the equipment off and on, the user is encouraged to try to correct the interference by one or more of the following measures:

- Reorient or relocate the receiving antenna.
- Increase the separation between the equipment and receiver.
- Connect the equipment into an outlet on a circuit different from that to which the receiver is connected.
- Consult the dealer or an experienced radio/TV technician for help.

Wireless Network Specifications

- The thermostat will attempt to pair with the first base module it "hears". Do not attempt to create more than one "pair" at the same time in the same place.
- To ensure paring success, place the T731W(O) within a few feet of the base module while pairing. Once paired, the signal strength tech menu can be used to ensure a robust wireless connection.
- Placing either device in or around large metal objects can severely degrade the wireless range.
- The wireless network will automatically recover in the event of a power loss or temporary signal loss.

Network Capabilities

- A single base module can support a single thermostat.
- The thermostat will require up to 60 seconds to reflect changes.

Note:

Changes or modifications not expressly approved by the manufacturer could void the user's authority to operate the equipment.

Specifications

Thermostat

The display range of temperature ... 41˚F to 95˚F (5˚C to 35˚C)
The control range of temperature.... 44˚F to 90˚F (7˚C to 32˚C)
Load rating.....1 amp per terminal, 1.5 amp maximum all terminals combined
Swing (cycle rate or differential) ..... Heating is adjustable from 0.2˚ to 2.0˚
Cooling is adjustable from 0.2˚ to 2.0˚
Power source .....18 to 30 VAC, NEC Class II, 50/60 Hz for hardwire
Battery power from 2 AA Alkaline batteries
Operating ambient ..... 32˚F to +105˚F (0˚C to +41˚C)
Operating humidity ..... 90% non-condensing maximum
Dimensions of thermostat ..... 4.7"W x 4.4"H x 1.1"D
Frequency ..... 916 MHz

Base Module

Load rating ..... 1 amp per terminal, 1.5 amp maximum all terminals combined.
Power source .....18 to 30 VAC, NEC Class II, 50/60 Hz
Operating ambient ..... 32˚F to +150˚F (0˚C to +65˚C)
Operating humidity ..... 90% non-condensing maximum

Warranty Information

Please Register Your Thermostat Here

Warranty Registration

Your new thermostat has a 5 year limited warranty. You must register your thermostat within 60 days of installation. Without this registration the warranty period will begin on date of manufacture. For warranty issues please contact the HVAC professional that installed this product. Please register your new thermostat online.

www.vivecomfort.com/warranty